PARTS MANUAL

1996
250
Sundancer

A BRUNSWICK COMPANY

Sea Ray® Parts Manual 1997 250 Sundancer MRP # 900621
Sea Ray Boats Inc 2600 Sea Ray Blvd Knoxville TN 37914 For Information call 1-800-SRBOATS or fax 1 800 755 2890
Sea Ray® international fax 1-404-817 2242 Internet address http.//www searay com/boats
Note Not all accessories shown in pictures or described herein are standard equipment or even available as options Option and features are subject to change without notice
Confirm the availability of all accessories and equipment with an authorized Sea Ray® dealer

250 SUNDANCER 1996

PAGE	STANDARD
1	EXTERIOR
2	EXTERIOR GRAPHICS
3	COCKPIT
4	INTERIOR
5	HEAD
6	BILGE
7	STEERING
8	A/C MAIN DISTRIBUTION PANEL
9	ELECTRICAL
10	FUEL
11	UPHOLSTERY
12	FABRICS
13	CANVAS
14	CANVAS
15	POTABLE WATER
16	HEAD SYSTEM

PAGE	OPTIONS
17	5 7L BRII (210 HP) STERN DRIVE
	5 7L EFI BRIII (220 HP) STERN DRIVE
	5 7LX BR III (250 PHP) STERN DRIVE
	7 4L BR I (300 PHP) STERN DRIVE
	7 4L BRIII (300 PHP) STERN DRIVE
	D 4 2L BRII (200 PHP) STERN DRIVE DIESEL
	D-7 3L BRIII (238 PHP) STERN DRIVEDIESEL
	220 VOLT / 50 CYCLE ELECTRICAL SYSTEM
	5" REMOTE CONTROLLED SPOTLIGHT
	ANCHOR CHUTE
	CAMPER CANVAS PACKAGE
	CANVAS PACKAGE
18	COCKPIT COVER
	COCKPIT COVER W/ CAMPER CANVAS PACKAGE
	COCKPIT TABLE W/ SUN PAD FILLER CUSHION
	CONVERTER 120V/60
	CONVERTER 220V/50INTL
	DEPTH FINDER LOWRANCE 3500 METERS DIGITAL
	ELECTRIC FLUSH HEAD / HOLDING TANK
	ELECTRIC FLUSH HEAD W/ HLDG TANK W/MACERAT
	EUROPEAN HOMOLOGATION #1
	EURO HOMOLOGATION #2 (GENERAL)
	GRAY WATER SYSTEM
	HALON SYSTEM
	HOT WATER 120V W/ 7 4L BRI
	HOT WATER 120V W/ D-7 3L BRIII
	HOT WATER 220V W/ 7 4L BRI
19	HOT WATER SYSTEM WITH EXCHANGER 120V/60
	HOT WATER SYSTEM WITH EXCHANGER 220V/50
	ITT DIRECT OVERBOARD HEAD (INT L)
	MACERATOR
	MANUAL FLUSH HEAD W/HOLDING TANK
	MANUAL FLUSH W/ HOLDING TANK W/ MACERATOR
	MERCATHODE II
	MICROWAVE 120V/60
	MICROWAVE 220V/50 INTL
	MID SHIP CLEATS (2) (IRELAND)
	REMOTE OIL FILTER 1 (V-8 W/ ALPHA)
20	ROD HOLDERS (PER PAIR)
	SUNBRELLA CANVAS CARPET RUNNERS INTERIOR
	TWO-TONE GELCOAT
	VHF RADIO STANDARD OMNI W/ANTENNA
	WINDLASS GOOD (ROPE)
	WINDLASS LOFRANS AIRON (CHAIN)
	WINDSHIELD DEFOGGER W/ HOT WATER 120V
	WINDSHIELD DEFOGGER W/ HOT WATER 220V
	WINDSHIELD DEFOGGER/COCKPIT HEATER
	WOOD ACCENT STEERING WHEEL

Sea Ray

250 DA

1996

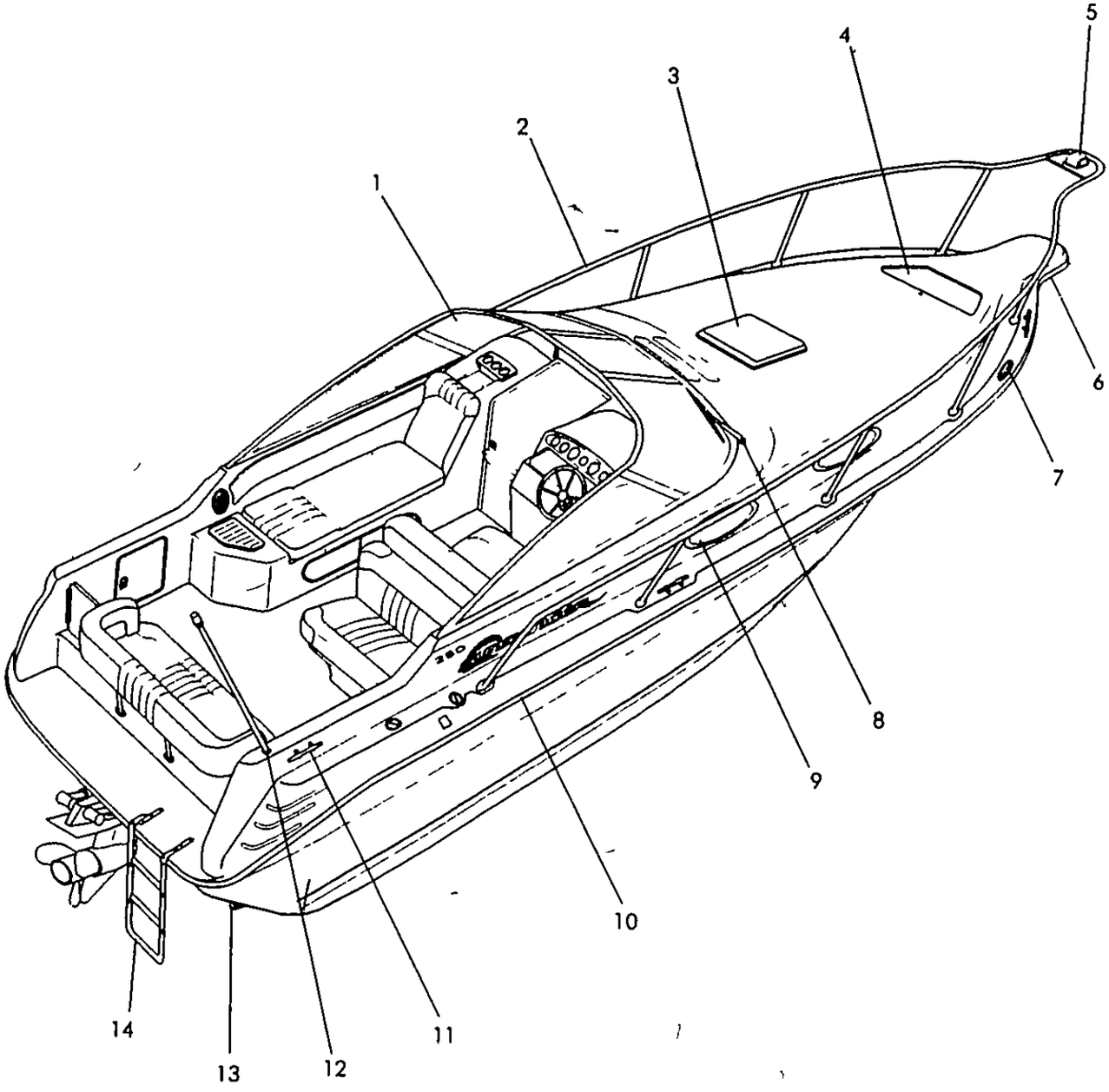

250 SUNDANCER 1996

EXTERIOR

1	824342	W/S 215EC/240DA CMPLT
	762500	SUPPORT 250DA PORT WINDSHIELD
	762518	SUPPORT 250DA STBD WINDSHIELD
	801936	W/S 250DA CTR 95
	801985	W/S 250DA HDWR KIT 95
	801910	W/S 250DA PORT FROMT 95
	801944	W/S 250DA PORT WING 95
	801969	W/S 250DA SCREW CVR 95
	801928	W/S 250DA STBD FRONT 95
	801951	W/S 250DA STBD WING 95
	801977	W/S 250DA SUP BAR 95
2	760629	RAIL BOW 250DA RAILS ONLY PAIR 95
	937094	RAIL BOW 250DA RAILS ONLY PORT/STBD 95
	760603	RAIL BOWFORM 250DA W/O PLATE 95
	760611	RAIL STANCHION SET 250DA 95
	153908	RIVET POP/BLIND #3/16 X 1/4 SS
	806356	RAIL STANCHION BOW #1P/#2S 250DA 18 75 95
	806364	RAIL STANCHION BOW #3P/#4S 250DA 17 25 95
	806372	RAIL STANCHION BOW #5P/#6S 250DA 16 1/8' 95
	806380	RAIL STANCHION BOW #7P/#8S 250DA 15 75 95
	806398	RAIL STANCHION BOW #9P/#10S 250DA 15 95
3	717520	HATCH DECK 20 X 20 ULTRA WHITE POWDER COAT
	802801	HANDLE DECK HATCH LATCHING 95
	802843	HATCH SPACER
	802819	HATCH ALL HATCH SIZES PIVOT LATCH ADAPTER 95
	802793	HATCH SCREW 3/8' PLEX
	802835	HATCH WASHER
	802827	LATCH HATCH HANDLE 95
	111666	SCREEN DECK HATCH 20 X 20
	718346	TRIM RING HATCH 20 X 20 X 1/4 WHT PDR COAT
	741405	CANVAS HATCH CVR 20X20 BLUE SLIP 94
	741421	CANVAS HATCH CVR 20X20 CHAR SLIP 94
	728790	CANVAS HATCH CVR 20X20 GRN SLIP 94
	154401	SNAP BUTTON W/ 1/4 BARREL
	154393	SNAP SOCKET MED ACTION
	154369	SNAP STUD W/#8 X 3/8' PH SS
4	806661	250DA 95 HATCH ANCHOR LCKR FBRGLS
	806679	250DA 95 HATCH ANCHOR LCKR W/HDWR FBRGLS
	156265	LATCH FLUSH D RING W/O LOCK BLACK
	195222	HINGE AL CONT 1 1/16 X 96 SAT
	126870	VENT CLAMSHELL (ROPE LOCK) 1 5/8 X 1 1/2'
5	580654	LIGHT NAV COMBO SIDE (BOW)
6	841320	INSERT 250DA 96 BOW PULPIT (VAC FORMED)
7	716308	HORN SINGLE CONCEALED W/GRILL
	801233	HORN SINGLE CONCEALEAD GRILL ONLY WHT PLAS
8	129684	WIPER MOTOR 85 DEG
	129759	WIPER BLADE 16 FLEX BLACK
	129783	WIPER ARM 15 19' BLACK
	129817	COVER WIPER MOTOR ALMOND
9	808121	PORTLIGHT OPENING ALL SS 3/8' FROSTED
10	720011	RUBRAIL PVC LIGHT GREY 17 (SS INSERT TYPE)
	727388	RUBRAIL PVC LIGHT GREY 20 (SS INSERT TYPE)
	760371	INSERT RUB RAIL SS 3/4 X 7
	721233	INSERT RUB RAIL SS 3/4 X 10
11	291658	CLEAT 8' 4 BOLT SS
	793471	PLATE BACKING UNIVERSAL 3/16
12	671750	LIGHT NAV ALL ROUND (STERN) 67' W/O BASE
	331710	LIGHT NAV STERN LIGHT BASE (RECT)
13	126599	EYE STERN 1/2' X 3 7/16
	793471	PLATE BACKING UNIVERSAL 3/16
14	726232	LADDER SWIM 3-STEP WHITE NYLON COATING
	777243	RAIL GRAB 12' STREAMLINE W/FLANGES 95

NOTSHOWN

221648	LABEL, DANGER SWIM LADDER (LEXAN)
481069	LABEL, GASOLINE RECOMMENDATION
696401	TAPE DECAL MID SIZE BOAT OF THE YEAR
696419	TAPE DECAL OFFICIAL BOAT OF WALT DISNEY WORLD
325191	PLUG RED BRASS DRAIN PLUG 1/2' MPT
162263	PLUG BRASS DRAIN SPARE 1/2' MPT

250 DA EXTERIOR GRAPHICS INDEX

Sea Ray

250 DA

1996

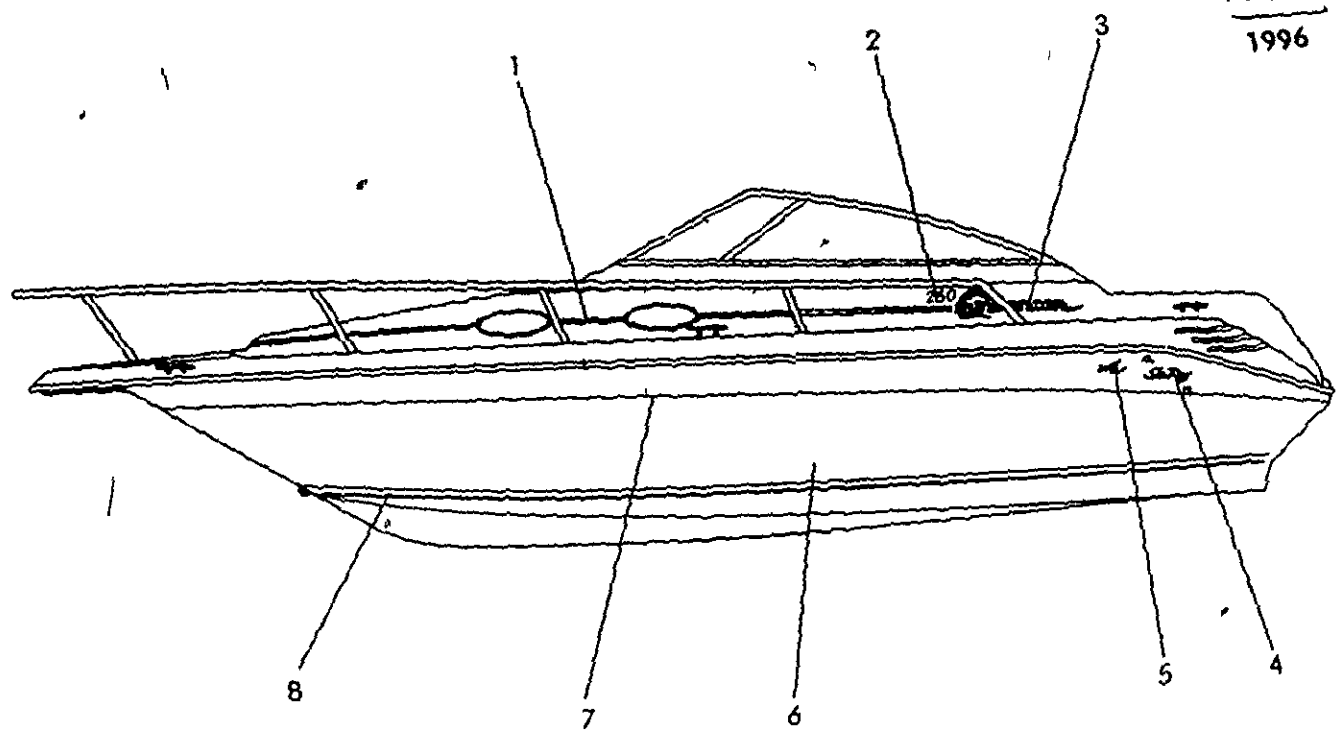

EXTERIOR GRAPHICS

1 832410 TAPE M/S 1 W/1/4 VOID IRISH/LTCOP CPM
832428 TAPE M/S 1 W/1/4 VOID PATIN/LTCOP CPM
728352 TAPE M/S 1 W1/4 VOID FLNTSIN/GLD CPM
2 727834 TAPE MODEL DESG 250 TRANSOM IRISH BLUE
834754 TAPE MODEL DESC 250 TRANSOM PATINA GRN
673269 TAPE MODEL DESG 250 TRANSOM FLINTSTONE F/R
3 832550 TAPE DECAL SUNDANCER IRISH/LTCOP
832568 TAPE DECAL SUNDANCER PATINA/LTCOP
728345 TAPE DECAL SUNDANCER FLINTSTONE METALLIC
4 735597 EMBLEM SEA RAY SCRIPT GOLD 13'
211607 EMBLEM SEA RAY SCRIPT CHROME 13'
5 735605 EMBLEM S/R LOGO/WAVE GOLD
205575 EMBLEM S/R LOGO/WAVE CHROME MED
6 591487 GEL COAT WHITE ANTIQUE
729095 GEL COAT WHITE ARCTIC (TOTE)
7 727511 TAPE SOLID 1/4 IRISH BLUE CPM
825653 TAPE SOLID 1/4 PATINA GREEN
616870 TAPE SOLID 1/4 FLINTSTONE CPM F/R
8 832444 TAPE M/S 3 25 W/DBL VOID IRISH/LTCOP/SEACPM
832451 TAPE M/S 3 25 W/DBL VOID PATINA/LTCOP/TEACPM
728360 TAPE M/S 3 25 W/DBL VOID FLINT/GLD/SLVR CPM

NOTSHOWN
729079 GEL COAT COOL GREY DASH (ARMORCOTE)
308197 GEL COAT GREY ENAMEL
830893 GEL COAT TEAL ESSENCE (9 ARMORCOTE)

6/19/96

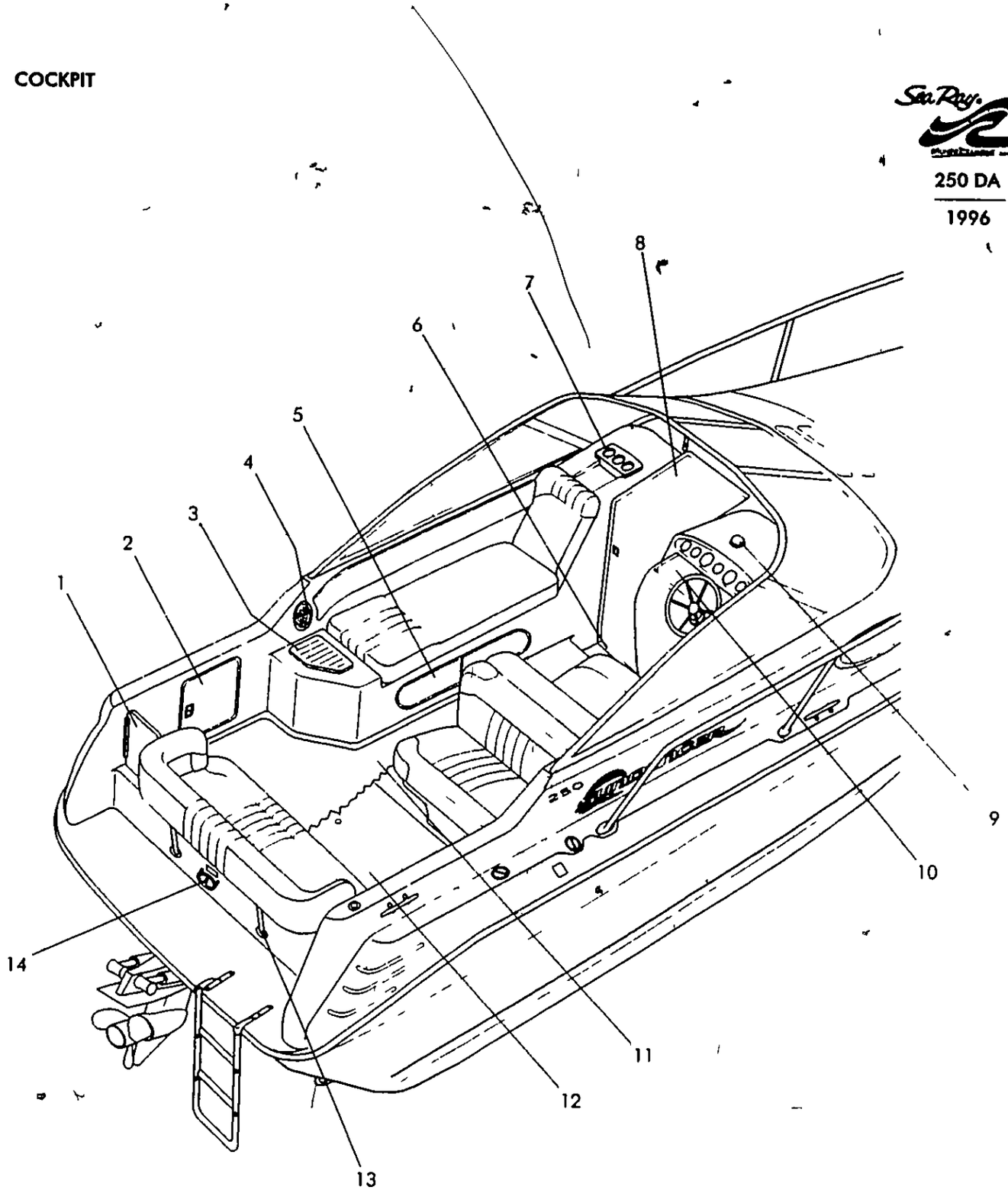
1
2
3
4
5
6
7
8
9
10
11
12
13
14

250 SUNDANCER 1996

COCKPIT

1	761726	DOOR HDPE 250DA TRANSOM W/HWDR A/W 95
	156240	BOLT BARREL CHROME 2 3/4"
	195230	HINGE AL CONT 1 5"X 96 SAT
	761734	STOP HDPE 250DA TRANSOM DOOR A/W 95
2	723155	DOOR STRG W/NOCH W/17X17 WHT FRAME RH (PORT)
	762559	DOOR STRG W/8 5X 15 5 WHT FRAME RH (STBD)
	777268	LATCH FLUSH MOUNT PULL WHITE
	195230	HINGE AL CONT 1 5"X 96 SAT
3	762526	LID COOLER 250DA 95
	123398	CLAMP HOSE #06M 5/16" 7/8' SS MINI
	760306	COOLER 250DA 95
	411132	ELBOW PVC 1/2"MPT X 5/8"BARB X 90DEG
	123943	HOSE CORR BILGE 5/8' BLACK
	129270	HINGE AL CONT 2' X 96 SAT
	140061	PLUG DRAIN PLUG 1/2" SNAPTITE
	124487	THRU HULL PLASTIC 5/8' WHITE
4	785188	SPEAKER DUAL CONE EXT 6 5 W/GRILL WHT
5	714972	WINDOW MID CABIN AFT 7 X 26 W/O SCREEN WHITE
	735159	SCREEN MID CABIN 7 X 26
6	761718	STEP 250DA THRESHOLD ENTRYWAY ARC WHT HDPE
7	725986	DRINK HOLDER 270DA-94 PLEX
8	806729	250DA 95 DOOR ENTRYWAY FBRGLS
	806737	250DA 95 DOOR ENTRYWAY CMPLT FBRGLS
	762872	LOCK 250DA CABIN DOOR WHT (MOBELLA)
	454207	NOSING ALUM 1/2' X 8 ROUNDED BRITE BUFF
	765800	STOP SLIDING DOOR/WINDOW CHROME
	796458	TRACK HDPE 250DA CABIN ENTRY DELRIN TOP
	796466	TRACK HDPE 250DA CABIN ENTRY DELRIN BTM
	937086	KEY CABIN ENTRY MOBELLA (762872 LOCK)
9	783746	COMPASS FLUSH MT 4 1/8 WHT
10	841833	LID PLEX 250DA DASH CHART CVR W/HINGE
11	533000	250DA 90-91 CARPET SNAP IN HIN#
	723700	CARPET EXT 28OZ NATURAL WHITE #901 FB
	760389	BINDING CARPET BIND NG BIAS BLK 1 5
	154401	SNAP BUTTON W/ 1/4 BARREL
	154393	SNAP SOCKET MED ACTION
	154369	SNAP STUD W/#8 X 3/8' PH SS
12	806687	250DA 95 HATCH AFT LRG FBRGLS
	806695	250DA 95 HATCH AFT LRG CMPLT FBRGLS
	806703	250DA 95 HATCH FWD SML FBRGLS
	806711	250DA 95 HATCH FWD SML CMPLT FBRGLS
	140111	LIFT HANDLE HATCH LIFT BOLT W/RING 3'
	140319	WASHER GASKET NEOPRENE 1/16 X 1/4 X 1
	675132	HOSE CORR SAN/WATER FILL 1 1/8" RH
	124578	THRU HULL PLASTIC 1 1/8' WHITE
	466615	HOSE CUFF 1 R H WHITE
	266130	DRAIN LINER W/90 DEG ELBOW 1 PLASTIC
13	762591	SUPPORT AFT SEAT BOLSTER SUPPORT 250DA
14	319990	SKI EYE TRANSOM MT 1/2' X3 5 DIA X 2'
	609461	LABLE USE CAUTION W/SKIER IN TOW
	793471	PLATE BACKING UNIVERSAL 3/16

NOTSHOWN

203539	ACCESS PLATE POLYPROP W/ O-RING WHITE 4
653238	ACCESS PLATE PLASTIC 6 WHT T HANDLE
129189	ANGLE ALUM 1 1/2 X 1 1/2 X 1/8 X 16
129247	BAR ALUM FLAT 2' X 1/8" X 12'
140244	CATCH SINGLE ROLLER WHITE NYLON W/STRIKE LG
256677	CLAMP HOSE #12 1/2" 1 1/4 SS 505
719096	DRINK HOLDER PLASTIC 4 X 3 MUG SIZE WHITE
129270	HINGE AL CONT 2" X 96 SAT
172726	HOSE CUFF 1 1/2" R H WHITE
490219	HOSE CORR SAN/WATER FILL 1 1/2' RH
130625	LIGHT STEP HALF SHADE
765404	PROPANEL 1/4"X 4 X 8 BLACK (HELM SEAT)
162701	SWITCH BATTERY ON/OFF W/O LOCK W/O DISC
124537	THRU HULL PLASTIC 1 1/2" WHITE
145136	RECEPTACLE CORR RESISTANT GREY
133645	CORD SET 120V/30A 50FT
133652	ADAPTER SHORE CORD 30A
133678	INLET SHORE POWER WHITE 30A
180067	COVER PLATE WATERPROOF RECEPT W/2 DOORS

OWNERS MANUAL

363671	PACKET OWNER 1 COMP LEGAL SIZE VINYL GY
471219	BOOKLET HOW TO KEEP STAINLESS STAINLESS
704502	CARD EXPRESS LIMITED TRANSFERABLE WARRANTY
137711	CARD NAVIGATION INFORMATION
187245	LABEL BOATMAN S CHECK LIST
147975	MANUAL YOU AND YOUR BOAT
147983	MANUAL YOU AND YOUR TRAILER
575738	MANUAL CRUISER OWNERS MANUAL 1991
203257	OFFICE IN SERVICE CK LIST SPORT CRUISERS

LABEL

763094	PLATE NMMA 250DA
135079	LABEL DANGER SWIM LADDER/PLATFORM (LEXAN)
324756	LABEL RECEPTACLE 12V 15A MAX (LEXAN)
510438	LABEL WARNING FIRE PORT
660431	LABEL WARNING DOOR MUST BE SECURED UNDERWAY

250 DA

1996

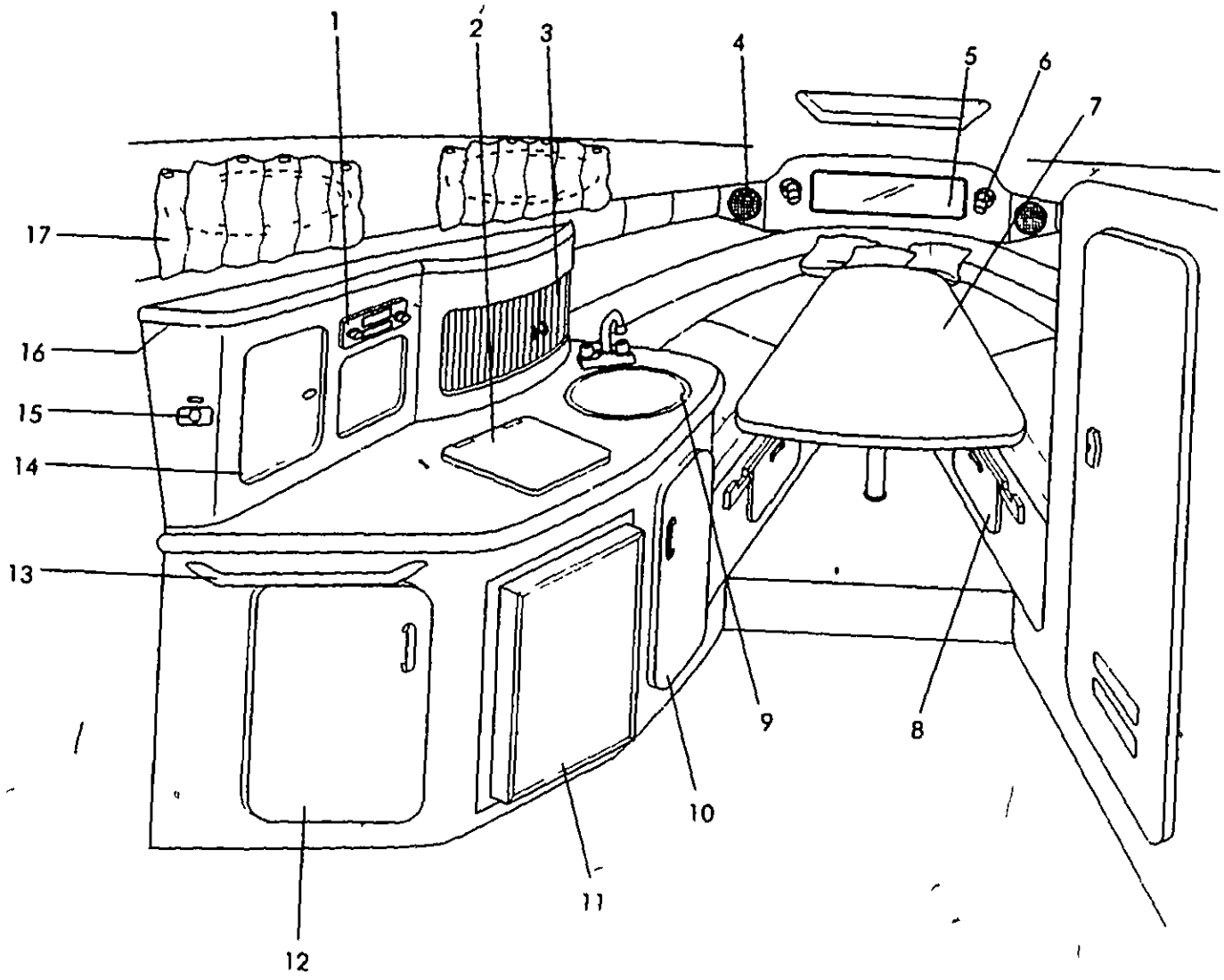

250 SUNDANCER 1996

INTERIOR

1	794909	STEREO TUNER CLARION WHITE
	133272	ANTENNA LEAD STEREO ORANGE 16GA
2	729954	STOVE ALC/ELEC SGL BURNER W/BLK GLASS LID
	729962	SINGLE ALCOHOL/ELECTRIC (220V)
3	806786	250DA 95 DOOR GALLEY UPR TAMBOUR
	570523	TAMBOUR FORMICA WHITE 4 X 8
	122929	TRACK TAMBOUR SLIDE LEFT SPIRAL
	122937	TRACK TAMBOUR SLIDE RIGHT SPIRAL
	387332	PULL DOOR/DRAWER PLASTIC WHITE U SHAPED
4	489617	COVER SPEAKER EXTERIOR COVER BACKING
	670307	SPEAKER CLARION INT 6 1/2' BLACK
5	806794	250DA 95 MIRROR ASSY VBERTH
	123349	MIRROR 1/8"X 10"X 26 1/2'
6	830307	SPOTLIGHT SWIVEL TASK BEIGE W/SHIELD HALOGEN
7	806802	250DA 95 TABLE ASSY VBERTH (TOP ONLY)
	806810	250DA 95 VBERTH W/BASE
	671925	BASE LEG/POST FLUSH MT ALUM (ZWAARDVIS)
	671933	BASE LEG/POST SURFACE MT ALUM (ZWAARDVIS)
	689232	POST TABLE LEG 30 3/4 ALUM (ZWAARDVIS)
	806828	250DA 95 SUPPORT VBERTH FILLER SLAT P/S
	806836	250DA 95 SLAT VBERTH FILLER 1PC 25 3/8' OAK
8	939090	DOOR V BERTH LOWER STORAGE P&S
	140244	CATCH SINGLE ROLLER WHITE NYLON W/STRIKE LG
	129270	HINGE AL CONT 2' X 96 SAT
	301796	PULL DOOR/DRAWER OAK (KENLIN)
9	801464	SINK VAC FORMED ROUND 13 5/16 X 5 5 DEEP
	123398	CLAMP HOSE #06M 5/16 7/8' SS MINI
	175687	DRAIN SINK STRAINER 2 1/2' SS
	123885	HOSE CORR BILGE 3/4 BLACK
	182964	THRU HULL PLASTIC 3/4 WHITE
10	806760	250DA 95 DOOR GALLEY STRG FWD LWR
	129270	HINGE AL CONT 2' X 96 SAT
	140244	CATCH SINGLE ROLLER WHITE NYLON W/STRIKE LG
	145870	PULL DOOR/DRAWER PLASTIC ALMOND
	431098	BASKET TRASH BASKET BEIGE (RUBBERMAID)
	634501	NOISING ALUM 5/8 X 10 ROUNDED BRIGHT BUFF
11	777417	REFIGERATOR 2 0 CF AC/DC
12	806778	250DA 95 DOOR GALLEY STRG AFT LWR
	129270	HINGE AL CONT 2' X 96 SAT
	140244	CATCH SINGLE ROLLER WHITE NYLON W/STRIKE LG
	145870	PULL DOOR/DRAWER PLASTIC ALMOND
	634501	NOISING ALUM 5/8' X 10 ROUNDED BRIGHT BUFF
13	693499	RAIL GRAB 20' STREAMLINE
14	761742	DOOR PLEX 250DA MDP BRONZE
	571661	HINGE PLEX DOOR W/BLK BUTTON & CATCH OFFSET
15	324335	RECEPTACLE FEMALE 12 VOLT
	324756	LABEL RECEPTACLE 12V 15A MAX (LEXAN)
16	531681	T MOLD CHROME 5/16' (PER FT)
17	831461	CURTAIN 250DA BLK/TAN DRIFTER #10/SAND 96
	831404	CURTAIN 250DA BLUE PIZAZZ OPAL/WMSBURG 96
	831438	CURTAIN 250DA GRN VELOCITY SAGE/JADE 96

NOTSHOWN

129189	ANGLE ALUM 1 1/2 X 1 1/2 X 1/8 X 16
145029	LIGHT DOME DUAL VOLT SURFACE MT 12V/120V
129270	HINGE AL CONT 2" X 96 SAT
137356	VENT POWER VENT 3" BLK
144899	BOX SWITCH BOX
144907	COVER PLATE SWITCH BOX
145128	BOX RECEPTACLE BOX ONLY
148015	HOOK CLOTHES HOOK SURFACE MT
312975	LIGHT SGL LIGHT DOME FLUSH MOUNT W/SW WHITE
312983	LIGHT DBL DOME FLUSH MOUNT W/SWITCH WHITE
481101	LABEL DANGER UNPLUG SHORE POWER (LEXAN)
642108	TAPE DECAL STRUCTURAL WARRANTY
679274	ACTUATOR ROCKER VERT BLK W/BLUE LENS LIGHTS
681577	PANEL 330DA/EC LIGHTS SWITCH 1993
711812	BODY ROCKER SWITCH SPST GRY 12V INCAND
716134	TAPE DECAL PRESIDENT S AWARD FOR QUALITY
806851	250DA 95 DOOR HANG LCKR

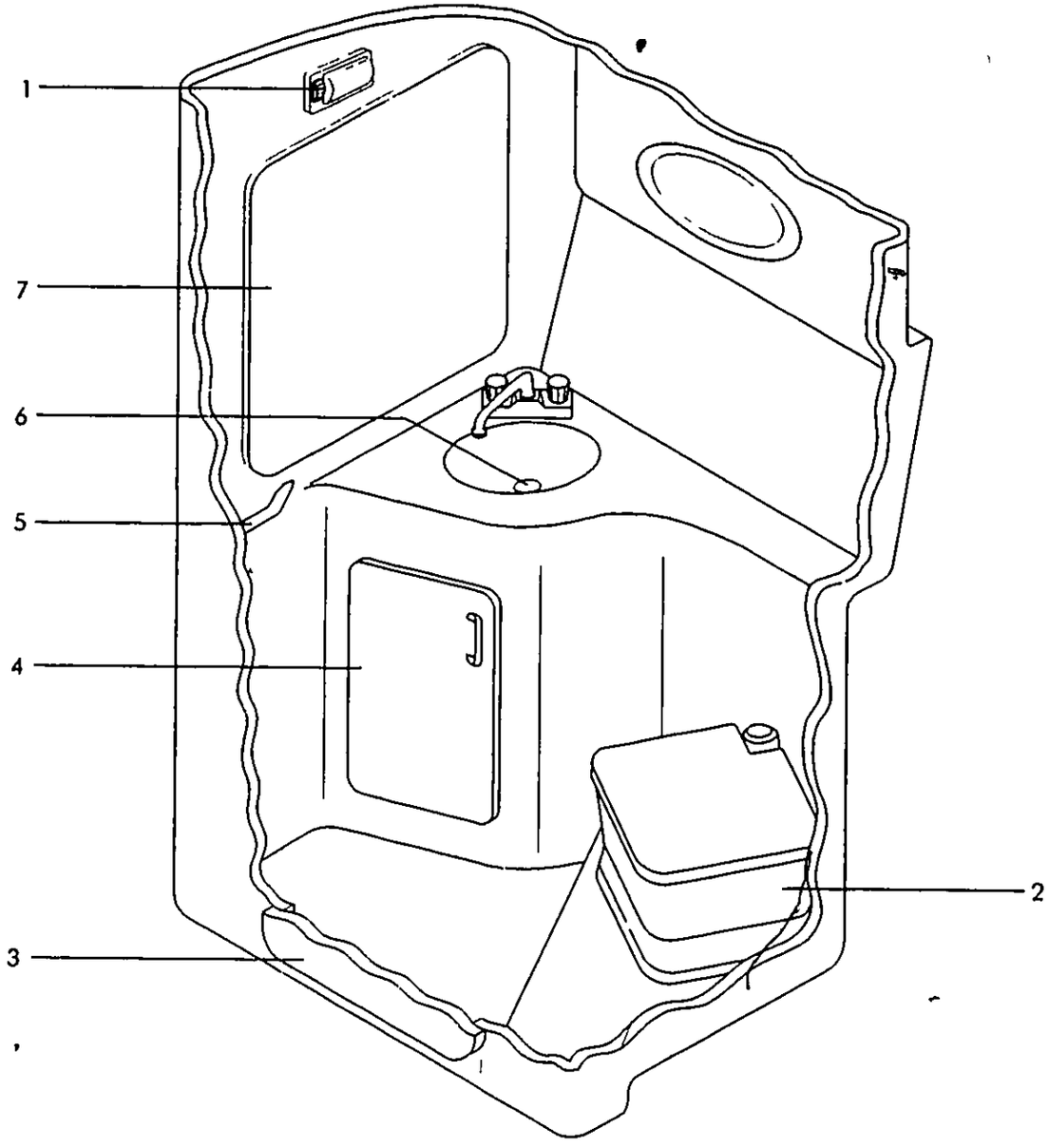
1
7
6
5
4
3
2

HEAD

1	312975	LIGHT SGL LIGHT DOME FLUSH MOUNT W/SW WHITE
2	130716	HEAD PORTABLE SANI POTTIER PARCHMENT
3	806620	250DA 95 DOOR HEAD ASSY
	195032	HINGE AL CONT 1 25 X 72' SAT
	595827	MICA PVC EDGE BAND 7/8" X 017 SAIL WHT
	731364	LATCH MOBELLA W/LOCK RH ANOD ALUM OPEN OUTWD
	838706	FRAME ALUM 20 7/16 X 53 25 250DA HEAD
4	806646	250DA 95 DOOR HEAD SINK STRG
	140244	CATCH SINGLE ROLLER WHITE NYLON W/STRIKE LG
	129270	HINGE AL CONT 2' X 96 SAT
	634501	NOSING ALUM 5/8' X 10 ROUNDED BRITE BUFF
	145870	PULL DOOR/DRAWER PLASTIC ALMOND
5	270421	RAIL GRAB 12' STREAMLINE
6	146175	DRAIN ASSY 1 1/4 DRAIN W/PLUG PLASTIC
	256693	CLAMP HOSE #24 1 2' SS 505
	123927	HOSE CORR BILGE 1 1/4 BLACK
	124578	THRU HULL PLASTIC 1 1/8' WHITE
7	806638	250DA 95 MIRROR HEAD ASSY
	252072	MIRROR 1/8' X 21 X 22 X 1 1/2 RAD

NOTSHOWN

123398	CLAMP HOSE #06M 5/16 7/8' SS MINI
124578	THRU HULL PLASTIC 1 1/8' WHITE
182964	THRU HULL PLAS 3/4 WHT
189571	SNAP CAP PLASTIC CLEAR WASHER
256677	CLAMP HOSE #12 1/2' 1 25 SS 505
344721	DRAIN ASSY GASKET SHOWER SLIP NUT
344762	DRAIN ASSY SHOWER SLIP NUT
466615	HOSE CUFF 1 R H WHITE
636563	SNAP CAP PLASTIC BROKER BEIGE
675132	HOSE CORR SAN/WATER FILL 1 1/8" RH
675926	CURTAIN SHOWER BEIGE 58"X 22'
814640	SHOWER SUMP ASSY W/FITTINGS/750 PUMP

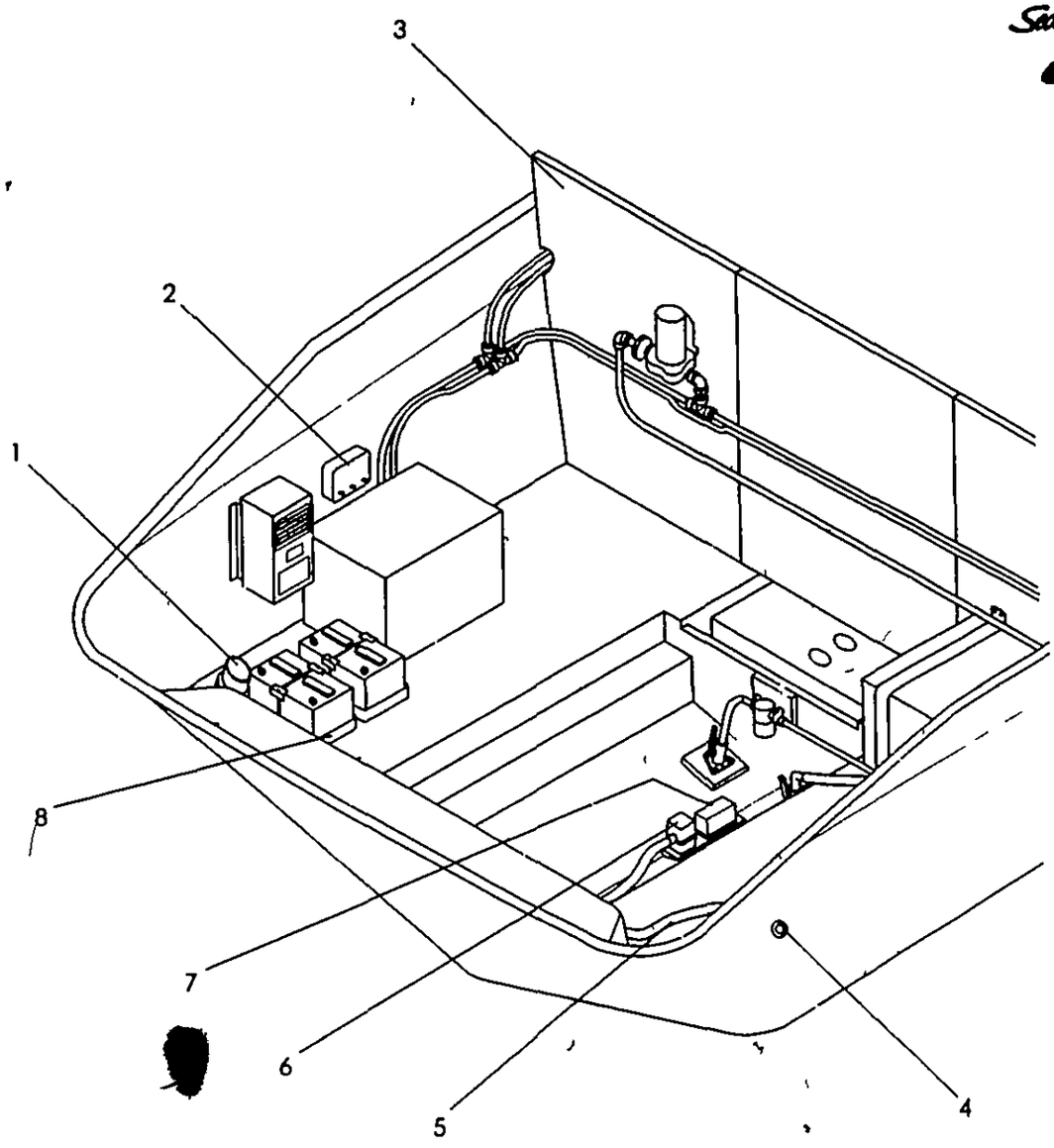

BILGE

1	744581	BLOWER BILGE 4 TURBOT 4000 WATER RESISTANT
	124016	HOSE VENT/BLOWER 4 EX HVY DTY
	716159	VENT PLASTIC 4 GRILL BLACK
2	759324	PANEL 250DA 95 MAIN DC BREAKER
	133280	BOX BREAKER BLACK W/O COVER (DAVIES)
	141119	BRKR MANUAL RESET KLIXON 50A CONTROL STATION
	208512	BRKR MANUAL RESET KLIXON 5A BILGE PUMP
	585885	BRKR. MANUAL RESET KLIXON 3A SUMP PUMP
3	142539	INSULATION GREY CONVOLUTED PRE CUT 36"X 66
4	124578	THRU HULL PLASTIC 1 1/8" WHITE
5	123901	HOSE CORR BILGE 1 1/8" BLACK
6	273003	PUMP BILGE 1000 GPH
7	678086	SWITCH FLOAT SUREBAIL
8	130435	HOLDER BATTERY GR 27 BLACK NYLON W/SS
	162701	SWITCH BATTERY ON/OFF W/O LOCK W/O DISC
	765438	CABLE BATT RED 1/0
	765446	CABLE BATT BLACK 1/0
	130849	BOOT BATTERY CABLE RED
	130856	BOOT BATTERY CABLE BLK

NOT SHOWN

609883	CLEAT GREY PLASTIC 3/4 X 1 X 4
481143	LABEL DANGER STAY CLEAR OF MOVING PTS (ENG)
134908	PLATE NOTICE OIL DISCHARGE
518563	RISER EX HOSE KIT 3' OR 6 RISERS 5 0L/5 7L
148155	RISER EXHAUST KIT 3'
802074	GALVANIC ISOLATOR ZINC SAVER II 3AMP

250 DA

1996

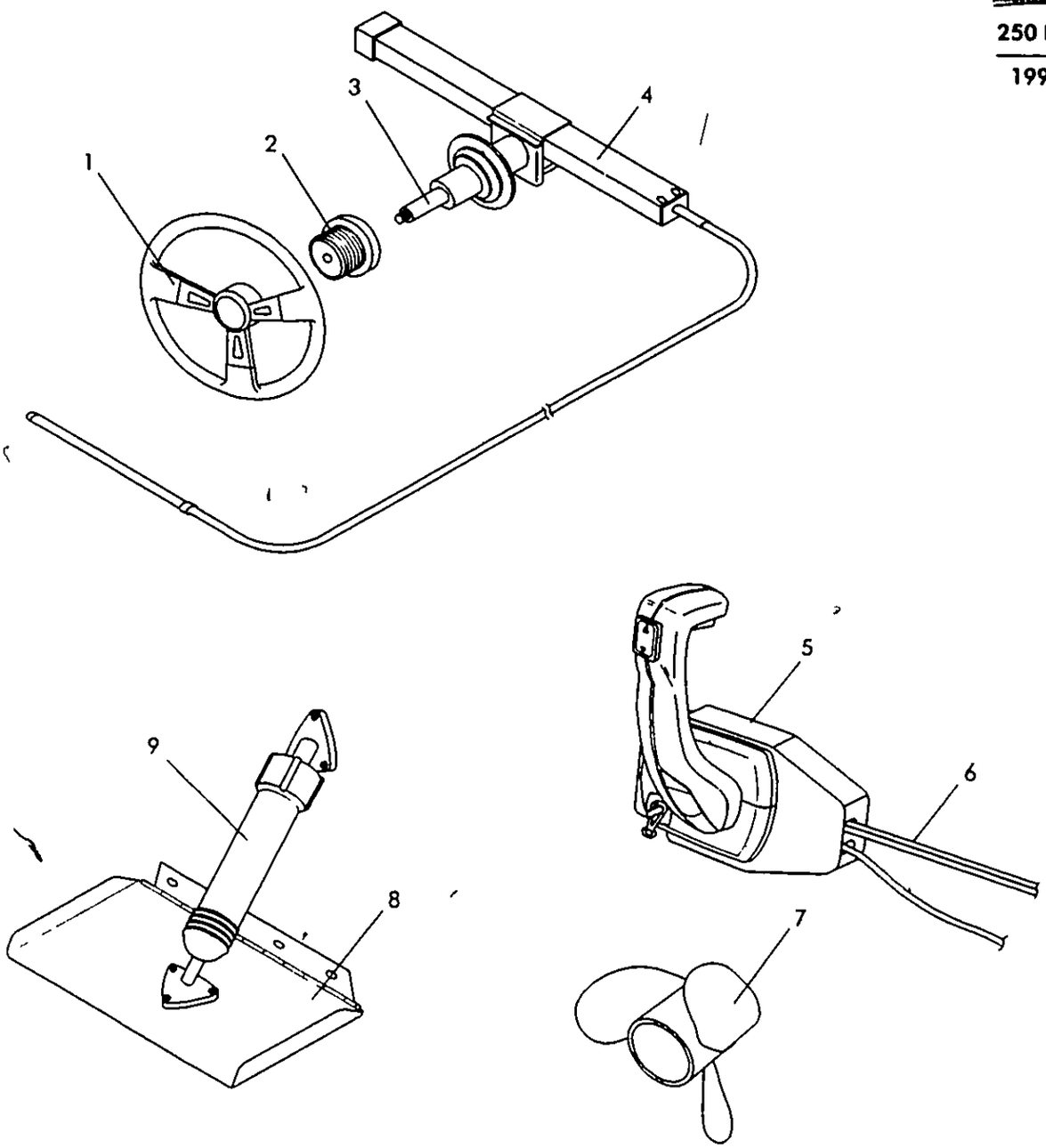

STEERING

1	735407	STEERING WHEEL, 15 8 DEG 3-SPOKE W/URETHANE
	836239	STEERING WHEEL 15" 8 DEG 3-SPOKE 5 BOLT HUB
	837211	STEERING WHEEL 3-SPOKE WOOD W/URETHANE PAD (SEE OPTIONS)
2	662510	STEERING STEERING PREFORMANCE TILT
3	662528	STEERING STEERING PREFORMANCE XR
4	256578	STEERING RACK/CABLE ASSY 16 0'
5	819920	COMMANDER 3000 CLASSIC W/BULLET CONNECTORS
	697045	SWITCH EMERGENCY CUT OFF W/LANYARD & FLOAT
	762633	LANYARD COILED W/FLOAT FOR #697045 SWITCH
6	125120	CABLE CONTROL MORSE KM/14 (SHIFT) INSIDE
	125138	CABLE CONTROL MORSE KM/15 (THROTTLE) OUTSIDE
7	511089	PROP 17 5"X 23" ALUM
8	529107	TRIM TAB ASSY 10 X 12 PARALLELOGRAM W/PUMP
	556670	TRIM TAB PLATE ASSY 10 X 12 PARALLELOGRAM PORT
	556688	TRIM TAB PLATE ASSY 10 X 12 PARALLELOGRAM STBD
	157487	SWITCH TRIM TABS ROCKER CONTROL W/O HARNESS
	214460	ZINC TRIM TAB W/1/4-20 X 3/4 BOLT/NUT
	271445	TRIM TAB HYD PUMP ONLY
	761627	PANEL 250DA TRIM 95
	709493	BODY ROCK SW DPDT (MOM) CEN OFF W/O LAMP
	709501	ACTUATOR ROCK VERT BLK W/O LENS TRIM TABS
	841825	SHIM TRIM TAB PUMP BLACK
9	133876	TRIM TAB HYD CYLINDER ONLY

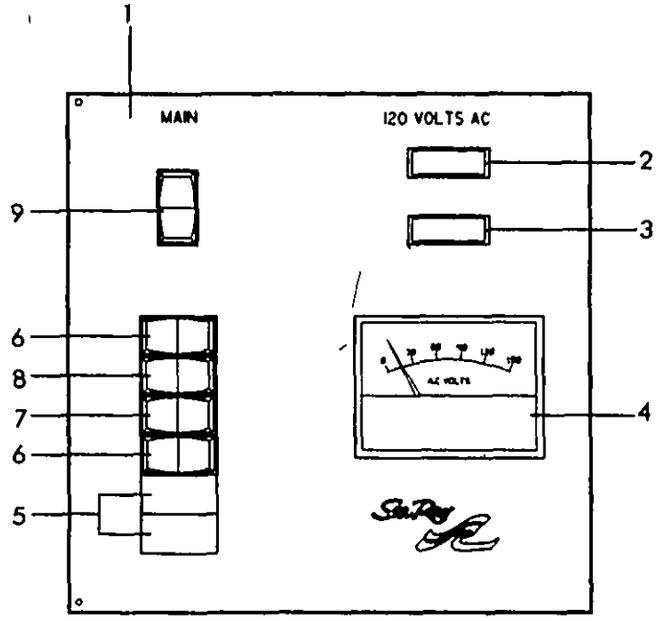
1
MAIN
120 VOLTS AC
2
3
9
6
8
7
6
5
4
AC VOLTS

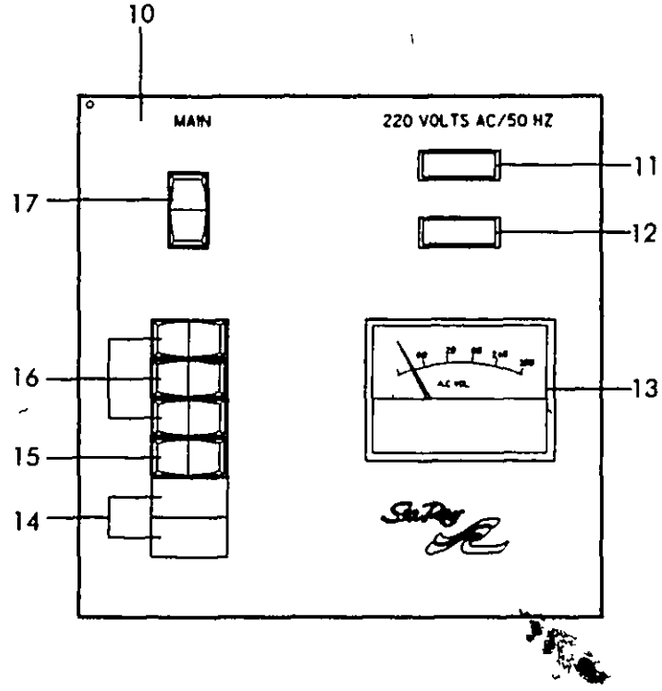
10
MAIN
220 VOLTS AC/50 HZ
11
12
17
16
15
14
13

AC MAIN DISTRIBITION PANEL

1	723338	PANEL 270DA 94 MDP 120/60
	939082	PANEL 270DA 94 MDP BLANK 120/60
2	572529	LIGHT POLATITY GREEN 125V POWER
3	557611	LIGHT POLARITY RED 125V REVERSED POLARITY
4	468249	GAUGE VOLTMETER AC 0-150 ANALOG WINDOW MOUNT
5	762922	PLUG ROCKER BRKR WHT V SERIES
6	332593	BRKR/ROCKER SGL POLE AC/DC HORZ 10A WHT STOVE AC CONVERTER (OPT)
7	332031	BRKR/ROCKER SGL POLE AC/DC HORZ 15A WHT WATER HEATER (OPT)
8	331991	BRKR/ROCKER SGL POLE AC/DC HORZ 20A WHT OUTLETS/REFRIGERATOR
9	648873	BRKR/ROCKER 2 POLE AC/DC VERT 30A WHT STOVE AC CONVERTER (OPT)

AC MAIN DISTRIBITON PANEL (220V/50HZ)

10	723346	PANEL 270DA 94 MDP 220/50
	939074	PANEL 270DA 94 MDP BLANK 220/50
11	557603	LIGHT POLARITY GREEN 220V POWER
12	557629	LIGHT POLARITY RED 220V REVERSED POLARITY
13	468207	GAUGE VOLTMETER AC 0-300 ANALOG WINDOW MOUNT
14	762922	PLUG ROCKER BRKR WHT V SERIES
15	754952	BRKR/ROCKER SGL POLE AC/DC HORZ 5A WHT AC CONVERTER (OPT)
16	332593	BRKR/BOCKER SGL POLE AC/DC HORZ 10A WHT STOVE OUTLETS/REFRIGERATOR WATER HEATER(OPT)
17	331991	BRKR/ROCK 2 POLE AC/DC VERT 20A WHT

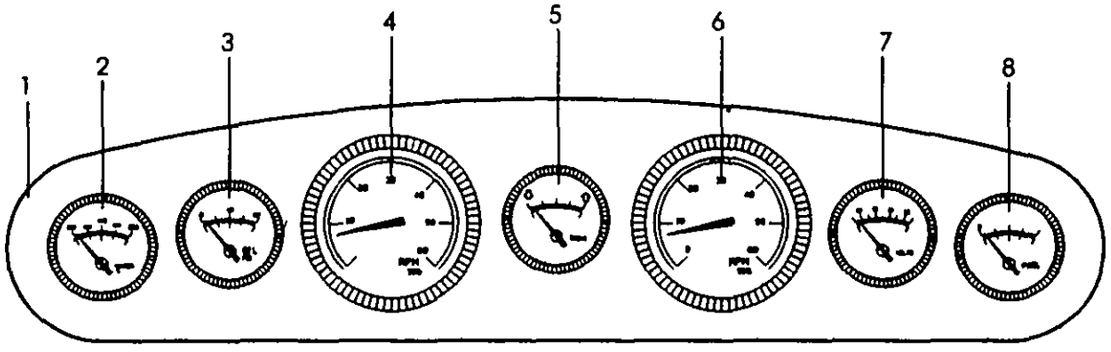
1
2
3
4
5
6
7
8

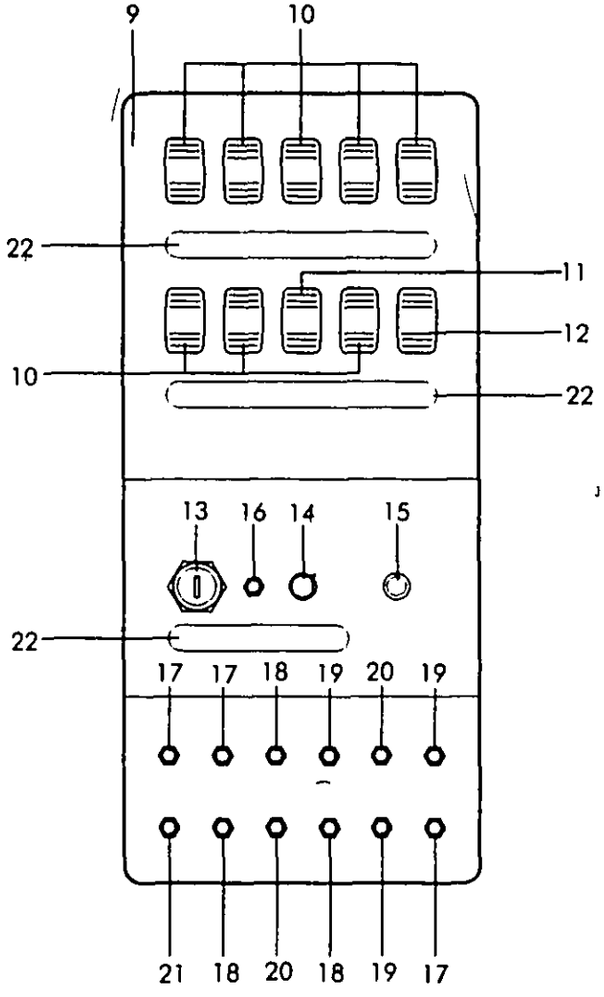
9
10
22
11
12
10
22
13
16
14
15
22
17
17
18
19
20
19
21
18
20
18
19
17

ELECTRICAL

1	765396	PANEL 250 GAUGE STD BURL 95
	939108	PANEL 250 GAUGE STD BURL 95 (BLANK)
2	718858	GAUGE WATER TEMP 220 DEG LEGEND 94
	719856	GAUGE WATER TEMP 240 DEG LEGEND 1994
3	718833	GAUGE OIL PRESSURE 0-80 LEGEND 94
	561241	SENDING UNIT OIL PRESSURE (0-125) SGL STA
	171405	TEE BRASS 1/8' FPT (OIL PRESSURE)
	183533	SWITCH OIL PRESSURE SENDER (OIL PRESSURE)
	327189	N'PPLE BRASS 18' MPT X CLOSE (OIL PRESSURE)
4	718866	GAUGE SPEDO 50 MPH 3' LEGEND
5	718841	GAUGE TRIM (MERC) LEGEND 1994
6	751479	GAUGE TACH W/HOUR 3" 6K STD ING LEGEND
	719799	GAUGE TACH W/HOUR 3" 4K 159T LEGEND OPT
7	718825	GAUGE VOLTMETER 10-16 LEGEND
8	718817	GAUGE FUEL SGL STATION LEGEND 1994

SWITCH AND BREAKER PANEL

9	761601	PANEL 250DA SWITCH/BREAKER STD 95
	939116	PANEL 250DA SWITCH/BREAKER STD 95 (BLANK)
10	711812	BODY ROCKER SWITCH SPST GRY 12V INCAND REFRIGERATOR WATER SYSTEM COCKPIT LIGHTS DEPTH SOUNDER (OPT) ACCESSORY (OPT) BILGE BLOWER BILGE PUMP WIPER
	711770	ACTUATOR ROCK VERT GRY W/BLUE LENS ACCY REFRIGERATOR WATER SYSTEM COCKPIT LIGHTS DEPTH SOUNDER (OPT) ACCESSORY (OPT) BILGE BLOWER BILGE PUMP NAVIGATION LIGHTS WIPER
11	711804	BODY ROCKER SWITCH OFF 2ON 10N GY 12V INCAND NAVIGATION LIGHTS
	711770	ACTUATOR ROCK VERT GRY W/BLUE LENS ACCY NAVIGATION LIGHTS
12	711861	BODY ROCKER SWITCH SPST (MOM) GRY HORN
	762369	ACTUATOR ROCK VERT GRY W/RED HORN SYMBOL
13	557785	SWITCH IGNITION STARTER
14	583278	SWITCH DIMMER DASH PANEL 12V (STERLING TECH)
	522805	KNOB DIMMER SWITCH BLACK (ALCO SWITCH)
15	179853	LIGHT INDICATOR GREEN 15VHALON SYSTEM
16	533026	BRKR P/BTN MANUAL RESET 10A W/SCREW TEE IGNITION
17	533729	BRKR P/BTN MANUAL RESET 15A REFRIGERATOR RECEPTACLE DEFROSTER
18	533109	BRKR P/BTN MANUAL RESET 10A WATER SYSTEM NAVIGATION LIGHTS HORN
19	571448	BRKR P/BTN MANUAL RESET 20A LIGHTS ACCESSORY TRIM TABS
20	533034	BRKR P/BTN MANUAL RESET 5A STEREO WIPER
21	612044	BRKR P/BTN MANUAL RESET 7A BILGE BLOWERS
22	717447	LIGHT STRIP 0 5 X 6 (BACK LIGHTING)
	717504	LIGHT STRIP 0 5 X 4 (BACK LIGHTING)
	623975	INVERTER EL LIGHT DC AC (BACK LIGHTING) PANEL WINDOW PLEX (TOP) (CENTER) OR (BOTTOM)

NOT SHOWN

496141	SEALANT POLYURETHANE WHITE
739862	DEPTH FINDER LORANCE
764597	HARNESS 250DA AC (ALTERNATING CURRENT)
726273	HOOK RINGHOLDER W/SNAP STRAP WHITE
800565	BOOKLET BOATER S GUIDE TO AC ELECTRICAL SYST
762377	PLUG ROCKER SWITCH GRY V SERIES
767038	GASKET ROCKER SWITCH

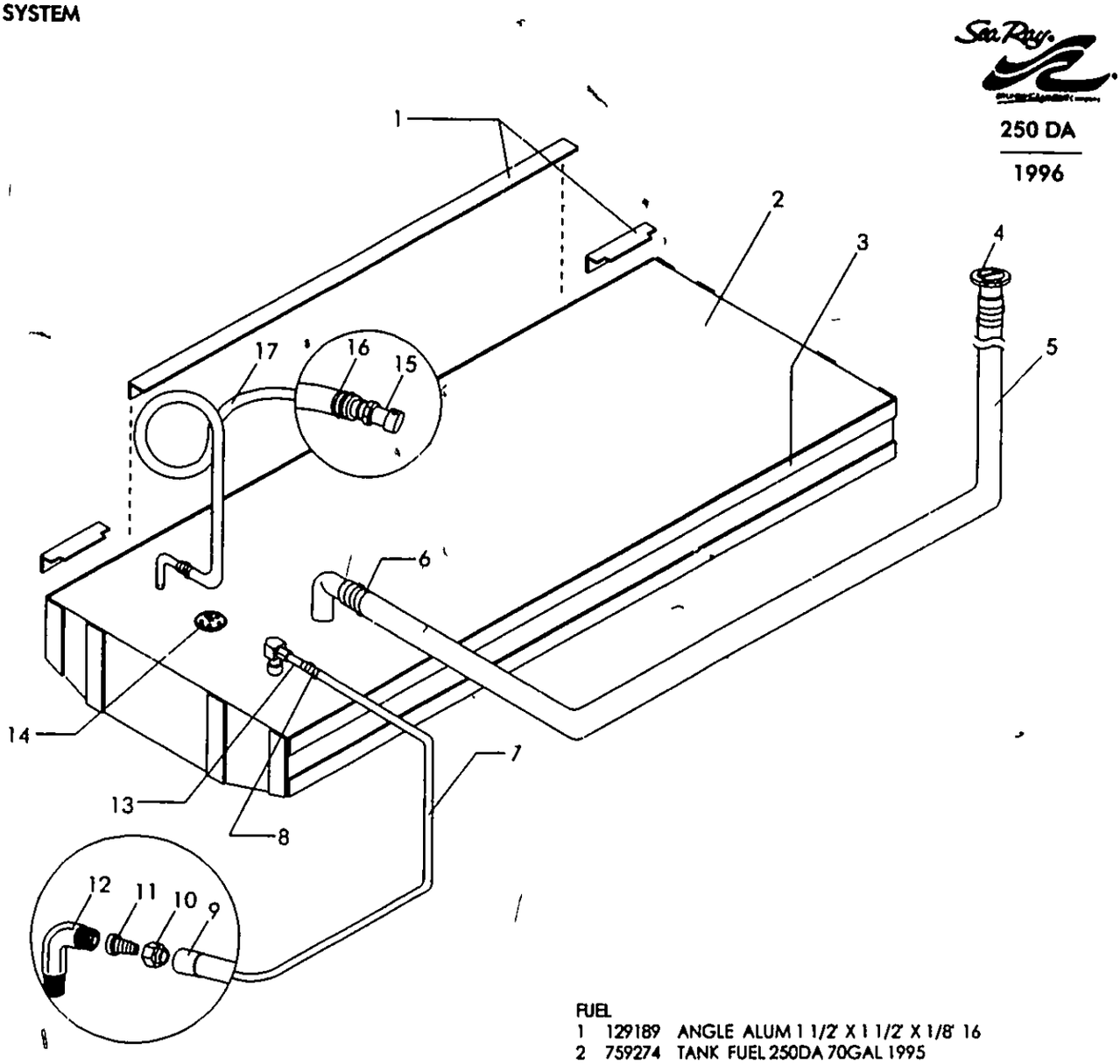

250 DA

1996

FUEL

1	129189	ANGLE ALUM 1 1/2" X 1 1/2" X 1/8" 16
2	759274	TANK FUEL 250DA 70GAL 1995
	481184	LABEL WARNING LEAKING FUEL FIRE/EXPL HAZARD
3	485318	TAPE FOAM CLOSED-CELL NEOPRENE 3/8" X 2"
4	291682	DECK PLATE GAS SS
	522557	DECK PLATE GAS/WATER (ATTWOOD) CAP W/CHAIN
	522599	KEY DECK PLATE CAP (ATTWOOD)
5	123745	HOSE FUEL 1 1/2" TYPE A CLASS 2
6	256693	CLAMP HOSE #24 1 2" SS 505
7	684738	HOSE FUEL 3/8" TYPE A1
8	123398	CLAMP HOSE #06M 5/16 7/8" SS MINI
9	139980	FERRULE FUEL LINE 3/8"
10	139931	NUT FUEL LINE NUT
11	139972	FITTING BRASS 3/8"SAE INV FLARE X 3/8"BARB
12	140467	ELBOW BRASS 90DEG 3/8"SAE X 1/4 MPT
13	782672	TUBE PICK UP FUEL W/ANTI SIPHON UNIVERSAL
	140491	VALVE BRASS ANTI/SIPH 1/4 X 1/4 MPT
14	621532	SENDING UNIT FUEL UNIVERSAL
15	126888	VENT FUEL/WATER TANK 5/8" X 3"
16	256677	CLAMP HOSE #12 1/2" 1 1/4 SS 505
17	123778	HOSE FUEL 5/8" TYPE A CLASS 2

NOT SHOWN

123612	CLAMP LOOM VINYL DIP 11/16
123604	CLAMP LOOM VINYL DIP 2 5

COCKPIT

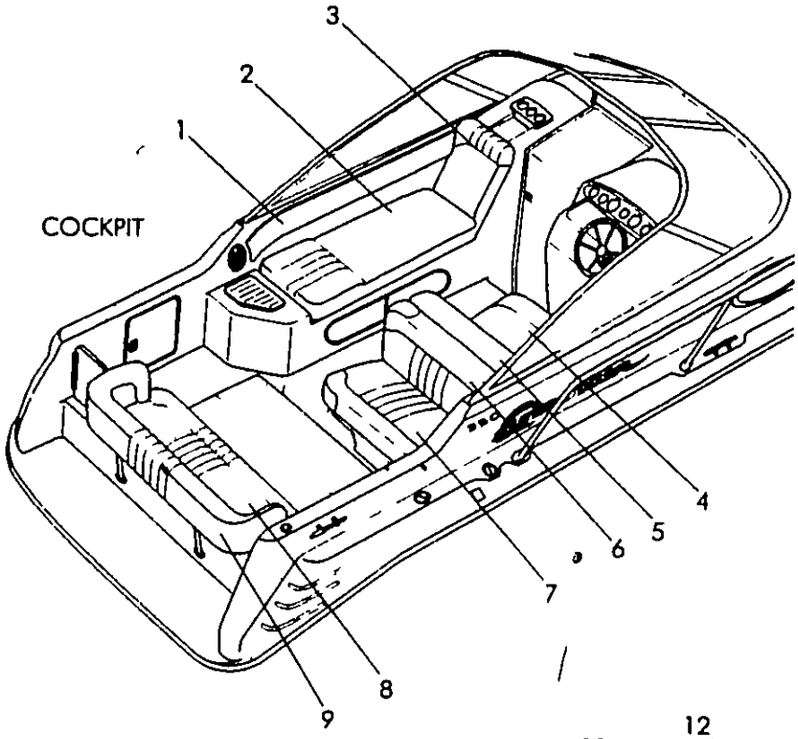

SALON

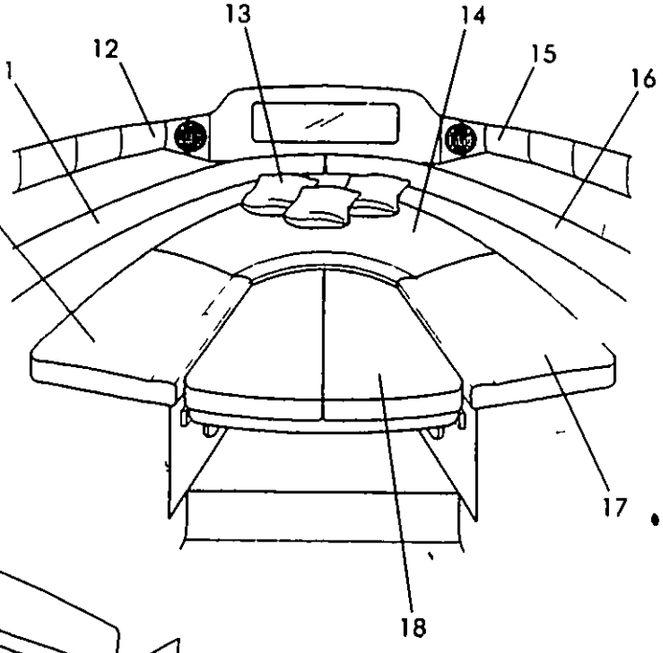

MID BERTH

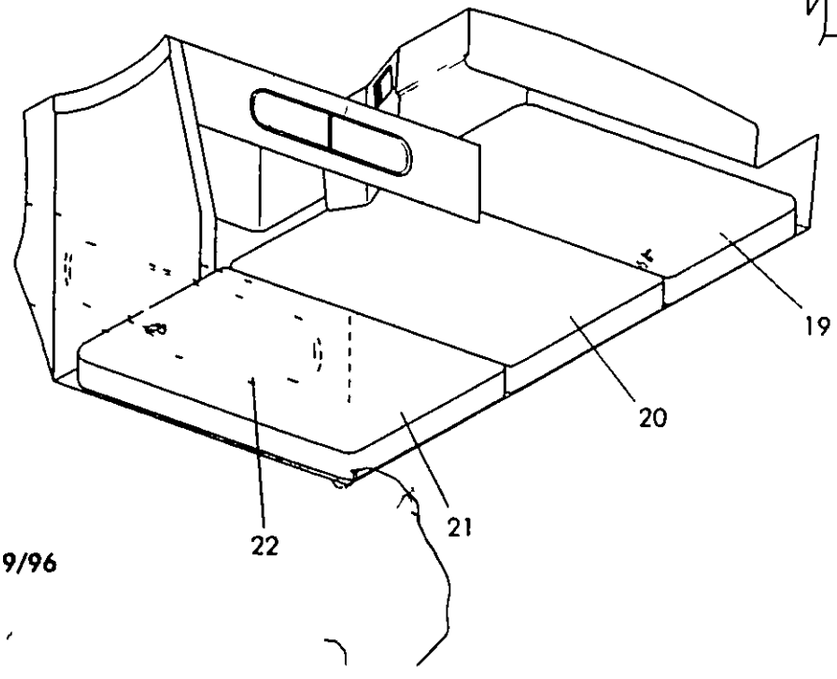

UPHOLSTERY

COCKPIT

1	766501	250DA 95 PANEL CKPT SIDE FORT HIN#
2	766527	250DA 95 CUSH CKPT LOUNGE HIN#
3	766535	250DA 95 B/R CKPT LOUNGE HIN#
4	766543	250DA 95 CUSH HELM SEAT HIN#
5	766550	250DA 95 BACK HELM SEAT HIN#
6	766576	250DA 95 B/R CKPT AFT FACING SEAT HIN #
7	766568	250DA 95 CUSH CKPT AFT FACING SEAT HIN#
8	766584	250DA 95 CUSH CKPT AFT SEAT HIN#
9	779231	CUSHION 250DA AFT BACKREST WHT 95

NOT SHOWN

766410	CUSHION 250DA CKPT COMP SET BLUE
766428	CUSHION 250DA CKPT COMP SET GRN 95-KX ONLY
766436	CUSHION 250DA CKPT COMP SET CHAR 95 KX ONLY

BLUE COLOR OPTION

936757	CUSHION 250DA CKPT COMP SET BLUE 96
936765	CUSHION 250DA HELM SEAT CENTER BLUE 96
936773	CUSHION 250DA HELM SEAT CENTER BLUE 96 SKIN
936781	CUSHION 250DA HELM SEAT FWD BLUE 96
936799	CUSHION 250DA HELM SEAT FWD BLUE 96 SKIN
936807	CUSHION 250DA HELM SEAT AFT BLUE 96
936815	CUSHION 250DA HELM SEAT AFT BLUE 96 SKIN
936823	CUSHION 250DA AFT SEAT BOTTOM BLUE 96
936831	CUSHION 250DA AFT SEAT BOTTOM BLUE 96 SKIN
936849	PANEL 250DA PORT LOUNGE SIDE BLUE 96
936856	PANEL 250DA PORT LOUNGE SIDE BLUE 96 SKIN
936864	CUSHION 250DA PORT LOUNGE BOTTOM BLUE 96
936872	CUSHION 250DA PORT LOUNGE BOTTOM BLUE 96
936880	CUSHION 250DA PORT LOUNGE BACKREST BLUE 96
936898	CUSHION 250DA PORT LOUNGE BACKREST BLUE 96 SKIN
936906	CUSHION 250DA AFT BACKREST BLUE 96
936914	CUSHION 250DA AFT BACKREST BLUE 96 SKIN

GREEN COLOR OPTION

831388	DIRECTIONS DARK TEAL EXP FLAT VINYL
833194	WELT DIRECTIONS DARK TEAL 5/32'
837310	CUSHION 250DA CKPT COMP SET GREEN 96
837328	CUSHION 250DA HELM SEAT CENTER GREEN 96
932608	CUSHION 250DA HELM SEAT CENTER GREEN 96 SKIN
837336	CUSHION 250DA HELM SEAT FWD GREEN 96
932616	CUSHION 250DA HELM SEAT FWD GREEN 96 SKIN
837344	CUSHION 250DA HELM SEAT AFT GREEN 96
932624	CUSHION 250DA HELM SEAT AFT GREEN 96 SKIN
837351	CUSHION 250DA AFT SEAT BOTTOM GREEN 96
932632	CUSHION 250DA AFT SEAT BOTTOM GREEN 96 SKIN
837377	PANEL 250DA PORT LOUNGE SIDE GREEN 96
932640	PANEL 250DA PORT LOUNGE SIDE GREEN 96 SKIN
837385	CUSHION 250DA PORT LOUNGE BOTTOM GREEN96
932657	CUSHION 250DA PORT LOUNGE BOTTOM GREEN 96 SKIN
837393	CUSHION 250DA PORT LOUNGE BACKREST GREEN 96
	CUSHION 250DA PORT LOUNGE BACKREST GREEN 96 SKIN
837369	CUSHION 250DA AFT BACKREST GREEN 96
932673	CUSHION 250DA AFT BACKREST GREEN 96 SKIN

BLACK & TAN COLOR OPTION

838466	CUSHION 250DA HELM SEAT CENTER GOLD 96
932681	CUSHION 250DA HELM SEAT CENTER SKIN GOLD 96
838474	CUSHION 250DA HELM SEAT FWD GOLD 96
932699	CUSHION 250DA HELM SEAT FWD SKIN GOLD 96
838482	CUSHION 250DA HELM SEAT AFT GOLD 96
932707	CUSHION 250DA HELM SEAT AFT SKIN GOLD 96
838490	CUSHION 250DA CKPT COMP SET GOLD 96
838508	CUSHION 250DA AFT SEAT BOTTOM GOLD 96
932715	CUSHION 250DA AFT SEAT BOTTOM SKIN GOLD 96
838516	CUSHION 250DA AFT BACKREST GOLD 96
932723	CUSHION 250DA AFT BACKREST SKIN GOLD 96
838524	PANEL 250DA PORT LOUNGE SIDE GOLD 96
932731	PANEL 250DA PORT LOUNGE SIDE SKIN GOLD 96
838532	CUSHION 250DA PORT LOUNGE BOTTOM GOLD 96
932749	CUSHION 250DA PORT LOUNGE BOTTOM SKIN GOLD 96
838540	CUSHION 250DA PORT LOUNGE BACKERST GOLD 96
932756	CUSHION 250DA PORT LOUNGE BACKERST SKIN GOLD96

SALON

10	806406	250DA 95 CUSH VBERTH PORT
	806414	250DA 95 CUSH SKIN VBERTH PORT
11	806422	250DA 95 BOLSTER VBERTH PORT
	806430	250DA 95 BOLSTER SKIN VBERTH PORT
12	806448	250DA 95 MUFF VBERTH GUNWALE PORT
	806455	250DA 95 MUFF SKIN VBERTH GUNWALF PORT
13	831396	PILLOW PKG 1996 BLUE PILLOW (3)
	831420	PILLOW PKG 1996 GREEN PILLOW (3)
	831453	PILLOW PKG 1996 BLK/TAN PILLOW (3)
14	806463	250DA 95 CUSH VBERTH FWD
	806471	250DA 95 CUSH SKIN VBERTH FWD
15	806489	250DA 95 MUFF VBERTH GUNWALF STBD
	806497	250DA 95 MUFF SKIN VBERTH GUNNWALE
16	806505	250DA 95 BOLSTER VBERTH STBD
	806513	250DA 95 BOLSTER SKIN VBERTH STBD
17	806521	250DA 95 CUSH VBERTH STBD
	806539	250DA 95 CUSH SKIN VBERTH STBD
18	806547	250DA 95 CUSH VBERTH FILLER
	806554	250DA 95 CUSH SKIN VBERTH FILLER

MID BERTH

19	806604	250DA 95 CUSH MIDBERTH PORT
	806612	250DA 95 CUSH SKIN MIDBERTH PORT
20	806588	250DA 95 CUSH MIDBERTH CTR
	806596	250DA 95 CUSH SKIN MIDBERTH CTR
21	806562	250DA 95 CUSH MIDBERTH STBD
	806570	250DA 95 CUSH SKIN MIDBERTH STBD
22	806869	250DA 95 MIRROR ASSY MIDBERTH
	806877	250DA 95 MIRROR ASSY MIDBERTH SKIN ONLY
	762583	MIRROR 1/8 X 11 X 30
	807131	MID BERTH MIRROR MUFF

NOT SHOWN

762799	DOOR 250DA ACCORDION

CANVAS/CARPET RUNNERS
761668 CANVAS 250DA 96 CARPET RUNNER BLUE
837096 CANVAS 250DA 96 CARPET RUNNER LINEN
761676 CANVAS 250DA 96 CARPET RUNNER GRN

FABRIC/SELECTION APPLICATION
BASE VINYL
498691 VINYL CUDDY GEL WHT EXP FLAT

ACCENT WELT
714568 VINYL DIR DK BLUE EXP FLAT
789107 WELT GOLD MEDALLION 5/32' (PX)
818831 VINYL SPECTRA GOLD MEDALLION N/W FLAT
831388 VINYL DIR DK TEAL EXP FLAT

V BERTH/AFT BERTH
714642 FABRIC STRATUS SKY BLUE FLAT
737619 FABRIC ROCKETEER #007 GRN FLAT
713479 FABRIC SHUBERT I MARBLE BEIGE FLAT

CURTAIN SET
763870 CURTAIN 250DA BLUE METRO #77/SLATE 95
763888 CURTAIN 250DA GREEN METRO #34/ROBNHD 95
834531 CURTAIN 250DA BLK/TAN PALETTE/ECRU 96
831461 CURTAIN 250DA BLK/TAN DRIFTER # 10/SAND 96

HEAD/HULL LINER
713495 VINYL CLIPPER MODIFIED FLAT 54 W
713503 VINYL CLIPPER MODIFIED 1/4 F/B 54 W

WASHABLE SURFACE
713503 VINYL CILPPER MODIFIED 1/4 FB
592501 VINYL SUEDE NATURAL FLAT (WASHABLE)
592527 VINYL SUEDE NATURAL 1/4 F/B (WASHABLE)

WASHABLE SURFACE
592501 VINYL SUEDE NATURAL FLAT (WASHABLE)
592527 VINYL SUEDE NATURAL 1/4 F/B (WASHABLE)

SNAP IN CARPET
936732 250DA 96 CARPET SNAPIN HIN#
724245 CARPET EXT 24 OZ MICA BLUE RIBLOC
724260 CARPET EXT 24 OZ TEAL #452 RIBLOC
723700 CARPET EXT 28OZ NATURAL WHITE #901 FB

INTERIOR/COCKPIT STORAGE
714782 CARPET EXT 24 OZ TEAL #452 GT
714816 CARPET EXT 24 OZ MOCHA MIST #D230 GT
718726 CARPET EXT 24 OZ MICA BLUE #593 GT

INTERIOR CARPET
718726 CARPET EXT 24 OZ MICA BLUE GREYLOC
714816 CARPET EXT 24 OZ MOCHA MIST #D230 GREYLOC
714782 CARPET EXT 24 OZ TEAL #452 GREYLOC

CANVAS
298364 CANVAS SUNBRELLA ROYAL BLUE TWEED 60' BLUE
595967 CANVAS SUNBRELLA ROYAL BLUE TWEED 60 W/BC
718916 CANVAS SUNBRELLA TEAL TWEED 60 GRN
720748 CANVAS SUNBRELLA TEAL TWEED 60 W/BC
720730 CANVAS SUNBRELLA LINEN TWEED 60
720755 CANVAS SUNBRELLA LINEN TWEED 60' W/BC

OPTIONAL DRAPES
831404 CURTAIN 250DA BLUE PIZAZZ OPAL/WMSBURG 96
831438 CURTAIN 250DA GRN VELOCITY SAGE/JADE 96
831461 CURTAIN 250DA BLK/TAN DRIFTER # 10/SAND 96

MICA-CABINET
232496 MICA 4 X 8 X 030 SAIL WHITE
595827 MICA PVC EDGE BAND 7/8 X 0 17 SAIL WHT
126052 PANEL LAM 1/2 4X8 SAIL WHITE G2S
223313 PANEL LAM 1/2' 4X8 SAIL WHT G1S MATTE

MICA TABLE
831412 MICA 4 X 8 X 039 GLACIER SLATE QUARRY G31 #7015-3175
831446 MICA 4 X 8 X 039 SPRING FOLEAGE QUARRY G31 #7017 3175
831479 MICA 4 X 8 X 039 MINK SCORPIO QUARRY G31 #256-3175

GEL COAT
729079 GEL COAT COOL GREY DASH (ARMORCOTE)
773895 GEL COAT GREY ENAMEL (VIRGIN)
591487 GEL COAT WHITE ANTIQUE
729095 GEL COAT WHITE ARCTIC (TOTE)
830893 GEL COAT TEAL ESSENCE ARMORCOTE)

250 DA

1996

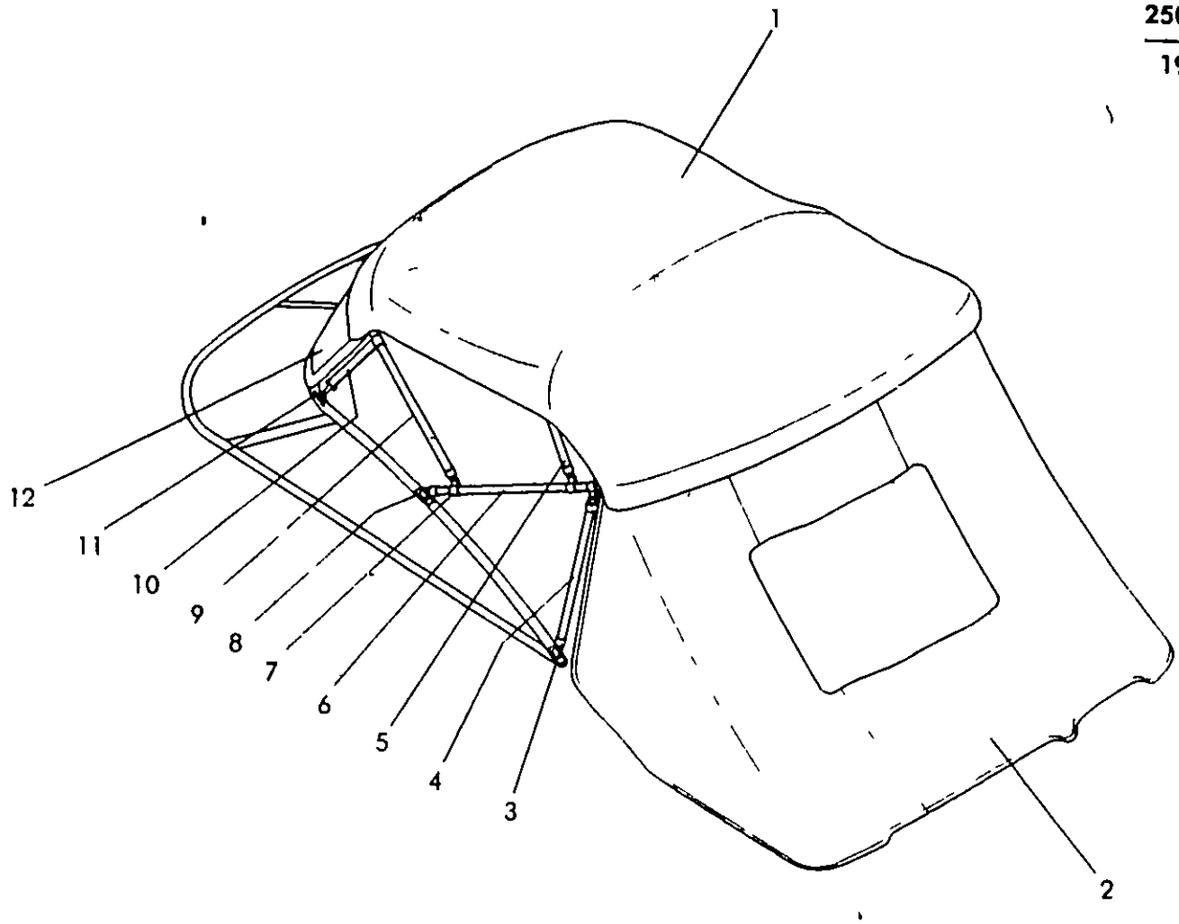

CANVAS/BIMINI

1	855239	CANVAS 250DA 96 BIM TOP BLUE
	855247	CANVAS 250DA 96 BIM TOP LINEN
	855254	CANVAS 250DA 96 BIM TOP GRN
	855262	CANVAS 250DA 96 BIM TOP FAB BLUE
	855270	CANVAS 250DA 96 BIM TOP FAB LINEN
	855288	CANVAS 250DA 96 BIM TOP FAB GRN
	837625	CANVAS 250DA 96 BIM TOP BOOT BLUE
	837641	CANVAS 250DA 96 BIM TOP BOOT LINEN
	837633	CANVAS 250DA 96 BIM TOP BOOT GRN
2	837567	CANVAS 250DA 96 AFT CURT BLUE
	837583	CANVAS 250DA 96 AFT CURT LINEN
	837575	CANVAS 250DA 96 AFT CURT GRN
3	595488	CAP INSIDE EYE END 7/8" GREY NYLON
	221085	CAP SS EYE END CAP 7/8"
4	855353	CANVAS 250DA 96 BIM TOP REAR STANCH
5	855320	CANVAS 250DA 96 BIM TOP BOW3 N/HDWR
6	855304	CANVAS 250DA 96 MAIN BOW N/HDWR
	855296	CANVAS 250DA 96 BIM TOP BOWS W/HDWR
	855338	CANVAS 250DA 96 BIMTOP HDWR MNT PKG
7	439307	SLIDE JAW SLIDE 7/8"
8	174953	HINGE DECK HINGE CONCAVE 1 SS (CONV TOP)
9	855312	CANVAS 250DA 96 BIM TOP BOW2 N/HDWR
10	855346	CANVAS 250DA 96 BIM TOP FWD STRAP BLK
11	148031	EYE STRAP EYE TIE DOWN
12	837658	CANVAS 250DA 96 BIM TOP/SOLID VISR PKG BLUE
	837674	CANVAS 250DA 96 BIM TOP/SOLID VISR PKG LINEN
	837666	CANVAS 250DA 96 BIM TOP/SOLID VISR PKG GRN

NOTSHOWN

837773	CANVAS 250DA 96 CPC BLUE
837799	CANVAS 250DA 96 CPC LINEN
837781	CANVAS 250DA 96 CPC GRN
837831	CANVAS 250DA 96 SIDE CURT SET BLUE
837856	CANVAS 250DA 96 SIDE CURT SET LINEN
837849	CANVAS 250DA 96 SIDE CURT SET GRN
855361	CANVAS 250DA 96 SIDE CURT PORT BLUE
855379	CANVAS 250DA 96 SIDE CURT PORT LINEN
855387	CANVAS 250DA 96 SIDE CURT PORT GRN
855395	CANVAS 250DA 96 SIDE CURT STBD BLUE
855403	CANVAS 250DA 96 SIDE CURT STBD LINEN
855411	CANVAS 250DA 96 SIDE CURT STBD GRN
580688	SPACER SIDE CURTAIN 7/8"

250 DA

1996

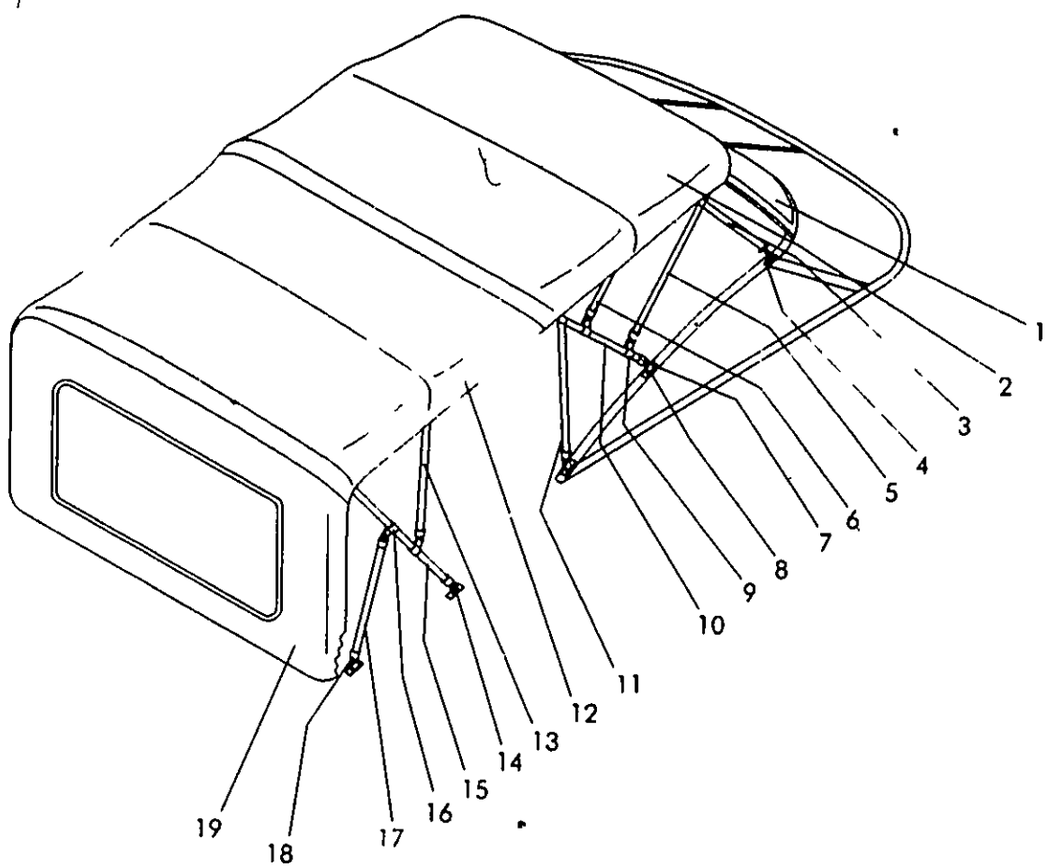

250 SUNDANCER 1996

CANVAS/CAMPER

1	837658	CANVAS 250DA 96 BIM TOP/SOLID VISR PKG BLUE
	837674	CANVAS 250DA 96 BIM TOP/SOLID VISR PKG LINEN
	837666	CANVAS 250DA 96 BIM TOP/SOLID VISR PKG GRN
2	855239	CANVAS 250DA 96 BIM TOP BLUE
	855247	CANVAS 250DA 96 BIM TOP LINEN
	855254	CANVAS 250DA 96 BIM TOP GRN
	855262	CANVAS 250DA 96 BIM TOP FAB BLUE
	855270	CANVAS 250DA 96 BIM TOP FAB LINEN
	855288	CANVAS 250DA 96 BIM TOP FAB GRN
	837625	CANVAS 250DA 96 BIM TOP BOOT BLUE
	837641	CANVAS 250DA 96 BIM TOP BOOT LINEN
	837633	CANVAS 250DA 96 BIM TOP BOOT GRN
	855593	CANVAS 250DA 96 CAMP TOP STRAP BLK
3	855346	CANVAS 250DA 96 BIM TOP FWD STRAP BLK
4	148031	EYE STRAP EYE TIE DOWN
5	855312	CANVAS 250DA 96 BIM TOP BOW2 N/HDWR
6	855320	CANVAS 250DA 96 BIM TOP BOW3 N/HDWR
7	595488	CAP INSIDE EYE END 7/8' GREY NYLON
	221085	CAP SS EYE END CAP 7/8'
8	174953	HINGE DECK HINGE CONCAVE 1 SS (CONV TOP)
9	439307	SLIDE JAW SLIDE 7/8"
10	855304	CANVAS 250DA 96 MAIN BOW N/HDWR
	855296	CANVAS 250DA 96 BIM TOP BOWS W/HDWR
	855338	CANVAS 250DA 96 BIMTOP HDWR MNT PKG
11	855353	CANVAS 250DA 96 BIM TOP REAR STANCH
12	837682	CANVAS 250DA 96 CAMP CMPLT BLUE
	837708	CANVAS 250DA 96 CAMP CMPLT LINEN
	837690	CANVAS 250DA 96 CAMP CMPLT GRN
	855452	CANVAS 250DA 96 CAMP CMPLT FAB BLUE
	855460	CANVAS 250DA 96 CAMP CMPLT FAB LINEN
	855478	CANVAS 250DA 96 CAMP CMPLT FAB GRN
	855486	CANVAS 250DA 96 CAMP TOP BLUE
	855494	CANVAS 250DA 96 CAMP TOP LINEN
	855502	CANVAS 250DA 96 CAMP TOP GRN
	855510	CANVAS 250DA 96 CAMP TOP FAB BLUE
	855528	CANVAS 250DA 96 CAMP TOP FAB LINEN
	855536	CANVAS 250DA 96 CAMP TOP FAB GRN
	837740	CANVAS 250DA 96 CAMP TOP BOOT BLUE
	837765	CANVAS 250DA 96 CAMP TOP BOOT LINEN
	837757	CANVAS 250DA 96 CAMP TOP BOOT GRN
13	855569	CANVAS 250DA 96 CAMP TOP BOW2 N/HDWR
14	174953	HINGE DECK HINGE CONCAVE 1 SS (CONV TOP)
15	855551	CANVAS 250DA 96 CAMP TOP MAIN BOW N/HDWR
	855544	CANVAS 250DA 96 CAMP TOP BOWS W/HDWR
	855577	CANVAS 250DA 96 CAMP TOP MNT PKG
16	439307	SLIDE JAW SLIDE 7/8'
17	855585	CANVAS 250DA 96 CAMP TOP REAR STANCH
18	595488	CAP INSIDE EYE END 7/8 GREY NYLON
	221085	CAP SS EYE END CAP 7/8'
19	855668	CANVAS 250DA 96 CAMP AFT CURT BLUE
	855676	CANVAS 250DA 96 CAMP AFT CURT LINEN
	855684	CANVAS 250DA 96 CAMP AFT CURT GRN

NOTSHOWN

837716	CANVAS 250DA 96 CAMP SIDE CURT SET BLUE
837732	CANVAS 250DA 96 CAMP SIDE CURT SET LINEN
837724	CANVAS 250DA 96 CAMP SIDE CURT SET GRN
855601	CANVAS 250DA 96 CAMP SIDE CURT PORT BLUE
855619	CANVAS 250DA 96 CAMP SIDE CURT PORT LINEN
855627	CANVAS 250DA 96 CAMP SIDE CURT PORT GRN
855635	CANVAS 250DA 96 CAMP SIDE CURT STBD BLUE
855643	CANVAS 250DA 96 CAMP SIDE CURT STBD LINEN
855650	CANVAS 250DA 96 CAMP SIDE CURT STBD GRN
580688	SPACER SIDE CURTAIN 7/8'
837807	CANVAS 250DA 96 CPC W/CAMP BLUE
837823	CANVAS 250DA 96 CPC W/CAMP LINEN
837815	CANVAS 250DA 96 CPC W/CAMP GRN
837492	BINDING CANVAS 7 LINEN TWEED SUNBRELLA
840181	BINDING CANVAS 7/8' LINEN TWEED SUNBRELLA

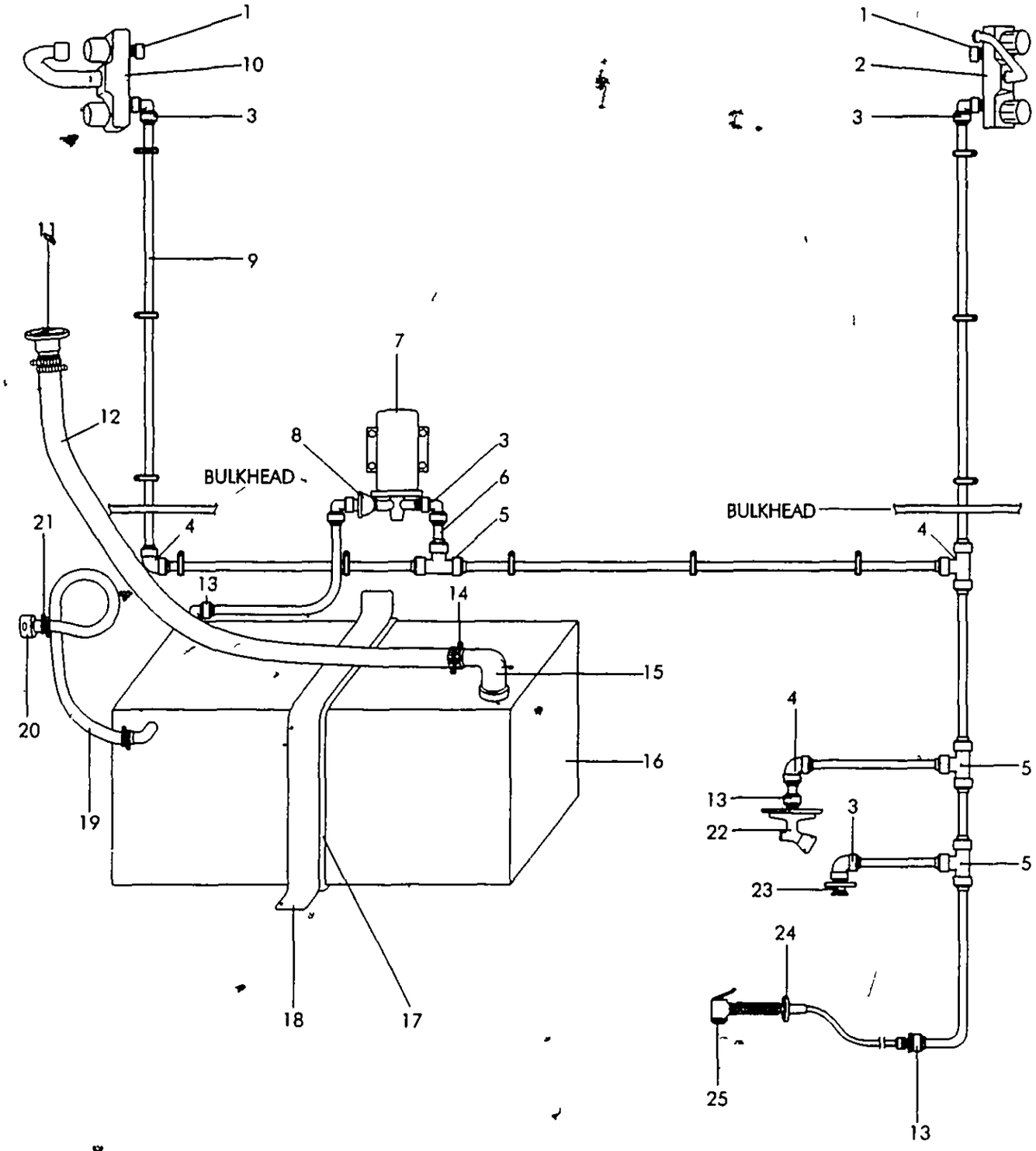
1
10
3
9
11
12
7
8
3
6
5
BULKHEAD
4
21
13
14
15
20
16
19
18
17
1
2
3
BULKHEAD
4
4
5
13
22
3
5
23
24
25
13

POTABLE WATER

1	275677	CAP PVC 1/2' FPT
2	749127	FAUCET TWIN HANDLE W/O POP-UP CHROME
	763995	FAUCET/SHOWER WHITE/MIX W/ON/OFF (SCANDVIK)
3	647586	ELBOW GENOVA 5/8"OD X 1/2"FIP SWIVEL
4	585869	ELBOW GENOVA 5/8"OD X 5/8"OD X 90DEG
5	585877	TEE GENOVA 5/8"OD X 5/8 OD X 5/8"OD
6	593913	NIPPLE GENOVA 5/8"OD X 3"
7	504969	PUMP FRESH WATER SHURFLO
8	406710	FILTER IN LINE WATER 1/2" FPT
9	322982	TUBING WATER-LINE 1/2" ID-GREY
10	749929	FAUCET GALLEY 6
11	291732	DECK PLATE WATER SS
	522557	DECK PLATE GAS/WATER (ATTWOOD) CAP W/CHAIN
	522599	KEY DECK PLATE CAP (ATTWOOD)
12	123851	HOSE CORR SAN/WATER FILL 1 1/2' LH
13	585844	ADAPTER GENOVA 1/2"MPT X 5/8' O D
14	256693	CLAMP HOSE #24 1 2" SS 505
15	130344	ELBOW PVC 1 5 MPT X 1 5"BARB X 90DEG
16	665752	TANK WATER 250EC 20GAL
17	485318	TAPE FOAM CLOSED-CELL NEOPRENE 3/8' X 2'
18	212761	STRAP HOLDING TANK 11 GAL 258DA 52 1/4
19	124719	HOSE SAN/CHEMICAL TDX 5/8"
20	126888	VENT FUEL/WATER TANK 5/8' X 3'
21	123398	CLAMP HOSE #06M 5/16 7/8" SS MINI
22	175901	FAUCET SILLCOCK NICKEL PLATED W/RED HANDLE
23	141168	INLET WATER W/PRESS REGULATOR
24	124578	THRU HULL PLAS 1 1/8' WHT
25	628024	SHOWER SPRAY NOZZLE W/8 SS HOSE (WHALE)

NOT SHOWN

593871	ADAPTER GENOVA 5/8"OD SPIGOT FIP
593905	ADAPTER GENOVA 5/8' OD SPIGOT MIP
221689	LABEL WARNING DOCKSIDE WATER (LEXAN)
815365	COUPLING GENOVA 1/2' MPT X 8MM COMP

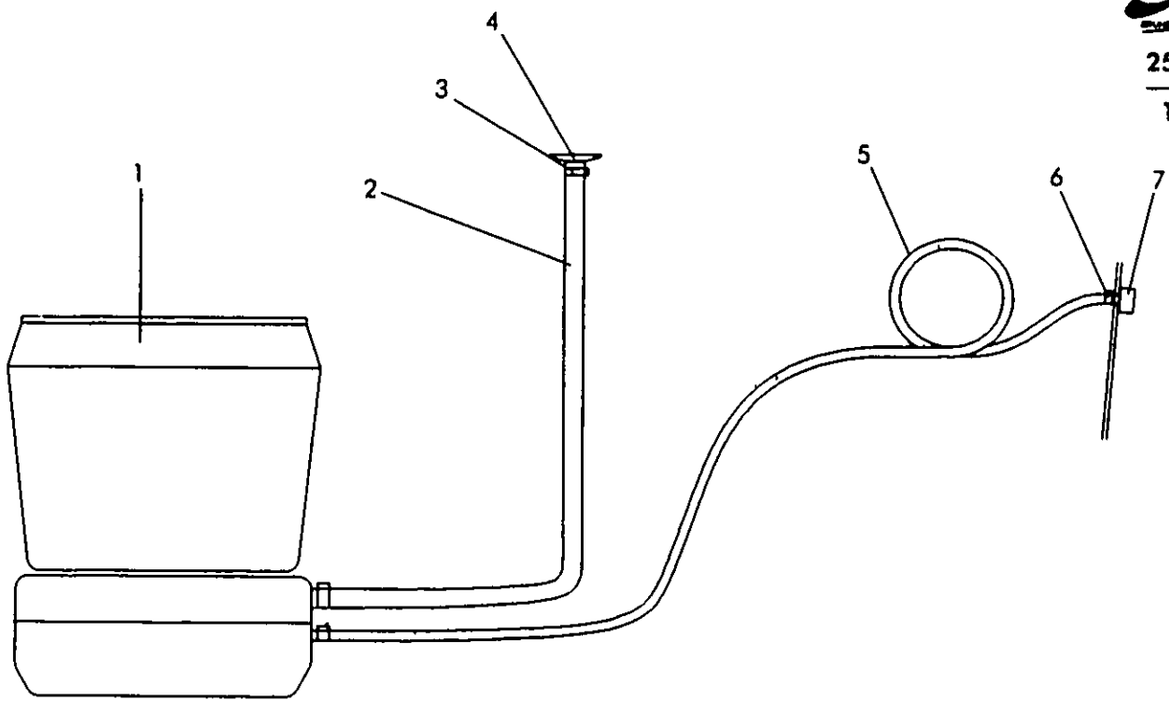

250 DA

1996

PORTAPOTTIE W/DOCKSIDE

1	595504	HEAD PORTABLE MSD SANI POTTE PARCHMENT
2	490219	HOSE CORR SAN/WATER FILL 1 1/2" RH
3	256693	CLAMP HOSE #24 1 2" SS 505
4	291757	DECK PLATE WASTE SS
	522581	DECK PLATE WASTE (ATTWOOD) CAP W/CHAIN
	522599	KEY DECK PLATE CAP (ATTWOOD)
5	123877	HOSE CORR SAN/WATER FILL 3/4
6	256677	CLAMP HOSE #12 1/2" 1 1/4 SS 505
7	126888	VENT FUEL/WATER TANK 5/8" X 3"

OPTIONS

5 7L BRII (210 HP) STERN DRIVE
256685 CLAMP HOSE #16 3/4 1 5 SS 505
256693 CLAMP HOSE #24 1 2 SS 505
723742 CLAMP PROTECTIVE RUBBER CAP 045 X 465-1/2
140467 ELBOW BRASS 90DEG 3/8 SAE X 1/4 MPT

5 7L EFI BRIII (220 HP) STERN DRIVE
256685 CLAMP HOSE #16 3/4 1 5 SS 505
256693 CLAMP HOSE #24 1 2 SS 505
723742 CLAMP PROTECTIVE RUBBER CAP 045 X 465-1/2
140467 ELBOW BRASS 90DEG 3/8 SAE X 1/4 MPT
708180 PROP 14 25 X 22 RH SS BR3
708172 PROP 15 75 X 22 LH SS BR3

5 7LX BR III (250 HP) STERN DRIVE
256685 CLAMP HOSE #16 3/4 1 5 SS 505
256693 CLAMP HOSE #24 1 2 SS 505
723742 CLAMP PROTECTIVE RUBBER CAP 045 X 465 1/2
140467 ELBOW BRASS 90DEG 3/8 SAE X 1/4 MPT
708180 PROP 14 25 X 22 RH SS BR3
708172 PROP 15 75 X 22 LH SS BR3

7 4L BR I (300 HP) STERN DRIVE
256685 CLAMP HOSE #16 3/4 1 5 SS 505
256693 CLAMP HOSE #24 1 2 SS 505
723742 CLAMP PROTECTIVE RUBBER CAP 045 X 465 1/2
140467 ELBOW BRASS 90DEG 3/8 SAE X 1/4 MPT
155820 PROP 15 5 X 17 MIRAGE SS

7 4L BRIII (300 PHP) STERN DRIVE
708214 PROP 15 25 X 26 LH SS BR3
708222 PROP 14 X 26 RH SS BR3
256693 CLAMP HOSE #24 1 2 SS 505
140467 ELBOW BRASS 90DEG 3/8 SAE X 1/4 MPT
723742 CLAMP PROTECTIVE RUBBER CAP 045 X 465 1/2

D 4 2L BRII (200 PHP) STERN DRIVE DIESEL
162768 ADAPTER BRASS 3/4 MPT X 3/8 FPT
140350 ADAPTER BRASS 9/16 NO RING X 1/4 PT FUEL FLTR
123398 CLAMP HOSE #06M 5/16 7/8 SS MINI
123612 CLAMP LOOM VINYL DIP 11/16
291708 DECK PLATE DIESEL SS
140467 ELBOW BRASS 90DEG 3/8 SAE X 1/4 MPT
139980 FERRULE FUEL LINE 3/8
140335 FILTER REMOTE FUEL FILTER DIESEL (500MA)
170589 FITTING BRASS 3/8 BARB/NUT
719823 GAUGE OIL PRESS 0-125 LEGEND
196774 HALON SYS ENG INTERRUPT/RESTART
819516 HARNESS 250DA ENG WIRING TRIM/PUMP 4 2L DIES
123745 HOSE FUEL 1 5 TYPE A CLASS 2
684738 HOSE FUEL 3/8 TYPE A1
123778 HOSE FUEL 5/8 TYPE A CLASS 2
624239 LABEL UPON HALON DISCHARGE SHUTDOWN ELEC SYS
765511 PANEL 250DA GAUGE DIESEL 1ST SURF BURL 95
819508 PANEL 250DA SW/BRKR 4 2L DIES 95
511089 PROP 17 5 X 23 ALUM RH
395665 SENDING UNIT ADAPTER FOR MCM530/636D TA
140046 VALVE FUEL SHUT OFF DIESEL 1/4

D-7 3L BRIII (238 PHP) STERN DRIVE DIESEL
162768 ADAPTER BRASS 3/4 MPT X 3/8 FPT
140350 ADAPTER BRASS 9/16 NO RING X 1/4 PT FUEL FLTR
123398 CLAMP HOSE #06M 5/16 7/8 SS MINI
123612 CLAMP LOOM VINYL DIP 11/16
291708 DECK PLATE DIESEL SS
140467 ELBOW BRASS 90DEG 3/8 SAE X 1/4 MPT
139980 FERRULE FUEL LINE 3/8
140335 FILTER REMOTE FUEL FILTER DIESEL (500MA)
170589 FITTING BRASS 3/8 BARB/NUT
196774 HALON SYS ENG INTERRUPT/RESTART
765503 HARNESS 250DA ENG WIRING TRIM & PUMP DIESEL
123745 HOSE FUEL 1 5 TYPE A CLASS 2
684738 HOSE FUEL 3/8 TYPE A1
123778 HOSE FUEL 5/8 TYPE A CLASS 2
624239 LABEL UPON HALON DISCHARGE SHUTDOWN ELEC SYS
765511 PANEL 250DA GAUGE DIESEL 1ST SURF BURL 95
765529 PANEL 250DA SWITCH/BREAKER DIESEL
708222 PROP 14 X 26 RH SS BR3
708214 PROP 15 25 X 26 LH SS BR3
395665 SENDING UNIT ADAPTER FOR MCM530/636D TA
140046 VALVE FUEL SHUT OFF DIESEL 1/4

220 VOLT / 50 CYCLE ELECTRICAL SYSTEM
145128 BOX RECEPTACLE BOX ONLY
144899 BOX SWITCH BOX
332593 BRKR/ROCK SGL POLE AC/DC HORZ 10A WHT
156885 CONN NON MET BOAT CABLE 0 30 TO 0 60 DIA
206268 CORD SET 220/50 16A 50FT
144907 COVER PLATE SWITCH BOX
206276 INLET SHORE POWER WHITE 220/50 16A
481101 LABEL DANGER UNPLUG SHORE POWER (LEXAN)
607051 LIGHT FLUOR 15 WATT 12 VOLT
723346 PANEL 270DA 94 MDP 220/50
256305 RECEPTACLE LEGRAND EXT W/COV 220/50 (GERMAN)
779462 REFRIGERATOR 2 0 CF AC/DC 220/50
729962 STOVE ALC/ELEC SGL BURNER W/BLK GLASS LID

5" REMOTE CONTROLLED SPOTLIGHT
129932 CABLE SPOTLIGHT CONTROL
263376 CONTROL SEARCH LIGHT
129908 SPOTLIGHT 5

ANCHOR CHUTE
144972 ANCHOR SHACKLE W/SCREW PIN 3/8
270637 ANCHOR 12LB W/960LB HOLD
291658 CLEAT 8 4 BOLT SS
828491 DAVIT ANCHOR W/ROLLER SS 12# ANCHOR ONLY
697508 EYE BOW 3/8 X 2 75
126599 EYE STERN 1/2 X 3 7/16
819334 HOOK SNAP 5/16 X 3 1/8 SS (LYON)
805499 LANYARD CABLE ANCHOR LOCK SS W/O DK BOLT 16
793471 PLATE BACKING UNIVERSAL 3/16
144956 ROPE NYLON ANCHOR LINE W/THIMBLE 1/2 X 150
156984 SEALANT SILICONE WHITE RTV 10 3 OZ

CAMPER CANVAS PACKAGE
837708 CANVAS 250DA CAMP CMPLT LINEN 96
837765 CANVAS 250DA CAMP TOP BOOT LINEN 96
837856 CANVAS 250DA SIDE CURT SET LINEN 96
837617 CANVAS 250DA VISOR CURT CLEAR/LINEN 96
580688 SPACER SIDE CURTAIN 7/8

CANVAS PACKAGE
837583 CANVAS 250DA AFT CURT LINEN 96
837856 CANVAS 250DA SIDE CURT SET LINEN 96
837617 CANVAS 250DA VISOR CURT CLEAR/LINEN 96
580688 SPACER SIDE CURTAIN 7/8

COCKPIT COVER
837799 CANVAS 250DA CPC LINEN 96

COCKPIT COVER W/ CAMPER CANVAS PACKAGE
837823 CANVAS 250DA CPC W/CAMP LINEN 96

COCKPIT TABLE W/ SUN PAD FILLER CUSHION
671933 BASE LEG/POST SURFACE MT ALUM (ZWAARDVIS)
156240 BOLT BARREL CHROME 2 75
836098 BRACKET PVC 1 5"X 1 5"X 10" 3/16"HOLES
642504 BUBBLE PACK ADHESIVE 6 X 300
609883 CLEAT PLAS 3/4"X 1"X 4 GREY
779405 CUSHION 250DA TABLE FILLER WHT 95
729095 GEL COAT WHITE ARCTIC (TOTE)
103309 MESH WHITE 60"
737908 MOUNT LEG/POST FLUSH MT ALUM ROUND ANODIZED
765156 POST TABLE LEG 10 25 RIBBED (ZWAARDVIS)
693697 POST TABLE LEG 26 RIBBED (ZWAARDVIS)

CONVERTER 120V/60
332593 BRKR/ROCK SGL POLE AC/DC HORZ 10A WHT
156885 CONN NON MET BOAT CABLE 0 30 TO 0 60 DIA
561621 CONVERTER 20 AMP (BLACK) 120VAC/12VDC
481101 LABEL DANGER UNPLUG SHORE POWER (LEXAN)
135665 WIRE 10GA AWG BLACK
135541 WIRE 8GA AWG GREEN

CONVERTER 220V/50INTL
510115 BRKR/TOGGLE SGL POLE AC/DC 5A WHT
156885 CONN NON MET BOAT CABLE 0 30 TO 0 60 DIA
481101 LABEL DANGER UNPLUG SHORE POWER (LEXAN)
135665 WIRE 10GA AWG BLACK
135541 WIRE 8GA AWG GREEN

DEPTH FINDER LOWRANCE 3500 METERS-DIGITAL
154930 CONN Q/DISC RECEPT 16/14GA X 250
740761 DEPTH FINDER BZ9 ROUND GREY BEZEL ONLY EURO
740753 DEPTH FINDER LOWRANCE 3500MTR(EURO)GRY NOBZL

ELECTRIC FLUSH HEAD / HOLDING TANK
806935 ADAPTER NYLON 3/4 MBARB X 3/4 MBARB
129247 BAR ALUM FLAT 1/8"X 2"X 12
123398 CLAMP HOSE #06M 5/16 7/8" SS MINI
256677 CLAMP HOSE #12 1/2" 1 25 SS 505
256693 CLAMP HOSE #24 1 2" SS 505
123604 CLAMP LOOM VINYL DIP 2 5
723759 CLAMP PROTECTIVE RUBBER CAP 035 X 300-1/2"
723742 CLAMP PROTECTIVE RUBBER CAP 045 X 465-1/2"
609883 CLEAT PLAS 3/4"X 1"X 4 GREY
169193 ELBOW BRZ 90DEG 3/4 MPT X 3/4"BARB
134759 FILTER HEAD TREATMENT SYSTEM
762880 FILTER IN LINE WATER STRAINER 3/4"FPT RONVC
130765 HEAD ELECTRIC MARINE TOILET CERAMIC
466615 HOSE CUFF 1 1/8" R H WHITE
675132 HOSE CORR SAN/WATER FILL 1 1/8" RH
123810 HOSE GEN PURPOSE 3/4
124719 HOSE SAN/CHEMICAL TDX 5/8"
123844 HOSE SAN/SMOOTH WALL 1 5
786699 PANEL 310SS/300DA WASTE SYSTEM CONTROL 95
518431 SEACOCK BRZ 3/4 W/O TAILPIECE (CONBRACO)
496141 SEALANT POLYURETHANE WHITE STAR BRITE
185033 SENDING UNIT HOLD TANK CAP W/PROBE (2 POS)
582783 TANK HOLDING 28 GAL
130690 TAPE FOAM CLOSED-CELL NEOPRENE 1/4 X 2"
640300 THRU HULL BRZ 3/4 W/O NUT (CONBRACO)

ELECTRIC FLUSH HEAD W/ HLDG TANK W/ MACERAT
221762 LABEL NOTICE OVERBOARD DISCHARGE (LEXAN)

EUROPEAN HOMOLOGATION #1
130112 ADAPTER BRASS 1/4 MPT X 3/8"BARB
836007 BRACKET ALUM 1 5"X 1 5"X 3" 3/16"HOLES
306936 BRACKET FUEL SHUT-OFF VALVE (SKINNER ELEC)
723742 CLAMP PROTECTIVE RUBBER CAP 045 X 465-1/2"
525980 HOSE VENT/BLOWER 4 ALUM
223388 NIPPLE BRASS 1/4 MPT X 2"
157008 SEALANT SILICONE CLEAR RTV 10 3 OZ
578914 THRU HULL PLAS 1 CCM BARBED FORESPAR
531921 VALVE BALL VALVE 2 WAY MARELON 1 25
557959 VALVE BALL VALVE 2 WAY MARELON 3/4
224329 VALVE BRASS FUEL SHUT OFF ELECTRIC SKINNER

EURO HOMOLOGATION #2 (GENERAL)
518886 BOLT HATCH PIN 7/16-14 X 1 SS
256693 CLAMP HOSE #24 1 2" SS 505
723742 CLAMP PROTECTIVE RUBBER CAP 045 X 465-1/2"
598151 HALON CABLE MANUAL PULL CABLE 17
609081 HALON SYS MANUAL/AUTO 150CF
172726 HOSE CUFF 1 5 R H WHITE
123919 HOSE CORR BILGE 1 5" BLK
490219 HOSE CORR SAN/WATER FILL 1 5 RH
156265 LATCH FLUSH D-RING W/O LOCK BLACK
529016 PUMP BILGE 16GPM MANUAL TWO POS
130690 TAPE FOAM CLOSED-CELL NEOPRENE 1/4 X 2"
124537 THRU HULL PLAS 1 5 WHT

GRAY WATER SYSTEM
531160 ADAPTER PVC 1 5"BARB X 3/4"BARB
129247 BAR ALUM FLAT 1/8"X 2"X 12
533729 BRKR P/BTN MANUAL RESET 15A
256685 CLAMP HOSE #16 3/4 1 5 SS 505
723742 CLAMP PROTECTIVE RUBBER CAP 045 X 465-1/2"
609883 CLEAT PLAS 3/4"X 1"X 4 GREY
123877 HOSE CORR SAN/WATER FILL 3/4
124719 HOSE SAN/CHEMICAL TDX 5/8"
123844 HOSE SAN/SMOOTH WALL 1 5
786699 PANEL 310SS/300DA WASTE SYSTEM CONTROL 95
185033 SENDING UNIT HOLD TANK CAP W/PROBE (2 POS)
582783 TANK HOLDING 28 GAL
130690 TAPE FOAM CLOSED-CELL NEOPRENE 1/4 X 2"
182964 THRU HULL PLAS 3/4 WHT
135327 WIRE 16GA AWG BLACK
135442 WIRE 16GA AWG GREEN
135400 WIRE 16GA AWG ORANGE
135525 WIRE 16GA AWG WHITE
135541 WIRE 8GA AWG GREEN

HALON SYSTEM
196337 HALON SYS AUTOMATIC 150CF (1301 HALON)
140608 LIGHT INDICATOR GREEN 14V

HOT WATER 120V W/ 7 4L BRI
169086 ELBOW BRASS 90DEG STREET 1/2"

HOT WATER 120V W/ D-7.3L BRIII
141713 ADAPTER BRASS 3/8"MPT X 5/8"BARB
395665 SENDING UNIT ADAPTER FOR MCM530/636D TA

HOT WATER 220V W/ 7 4L BRI
169086 ELBOW BRASS 90DEG STREET 1/2"

HOT WATER 220V W/ D-7.3L BRIII
141713 ADAPTER BRASS 3/8" MPT X 5/8"BARB
395665 SENDING UNIT ADAPTER FOR MCM530/636D TA

HOT WATER SYSTEM WITH EXCHANGER 120V/60
144675 ADAPTER BRASS 1/2"MPT X 5/8"BARB
593897 ADAPTER BRASS 1/2" MPT X 5/8"OD SPIG (GENOVA)
332031 BRKR/ROCK SGL POLE AC/DC HORZ 15A WHT
256677 CLAMP HOSE #12 1/2" 1 25 SS 505
123604 CLAMP LOOM VINYL DIP 2 5
156885 CONN NON MET BOAT CABLE 0 30 TO 0 60 DIA
647586 ELBOW GENOVA 1/2"FPT SWIVEL X 5/8"OD
585869 ELBOW GENOVA 5/8" OD X 5/8" OD X 90DEG
585869 ELBOW GENOVA 5/8" OD X 5/8" OD X 90DEG
113928 HEATER WATER 6 GAL 110/60
124594 HOSE WATER 5/8" HVY DTY (HEATER)
481101 LABEL, DANGER UNPLUG SHORE POWER (LEXAN)
585877 TEE GENOVA 5/8" OD X 5/8"OD X 5/8"OD
322982 TUBING WATER LINE 1/2" ID-GREY
693671 VALVE TRANSITION CHECK 1/2 MPT X 5/8" OD

HOT WATER SYSTEM WITH EXCHANGER 220V/50
144675 ADAPTER BRASS 1/2" MPT X 5/8"BARB
593897 ADAPTER BRASS 1/2" MPT X 5/8" OD SPIG (GENOVA)
332593 BRKR/ROCK SGL POLE AC/DC HORZ 10A WHT
256677 CLAMP HOSE #12 1/2" 1 25 SS 505
123604 CLAMP LOOM VINYL DIP 2 5
156885 CONN NON MET BOAT CABLE 0 30 TO 0 60 DIA
647586 ELBOW GENOVA 1/2"FPT SWIVEL X 5/8" OD
585869 ELBOW GENOVA 5/8" OD X 5/8"OD X 90DEG
585869 ELBOW GENOVA 5/8" OD X 5/8" OD X 90DEG
113936 HEATER WATER 6 GAL 220/50
124594 HOSE WATER 5/8" HVY DTY (HEATER)
481101 LABEL DANGER UNPLUG SHORE POWER (LEXAN)
585877 TEE GENOVA 5/8 OD X 5/8" OD X 5/8" OD
322982 TUBING WATER LINE 1/2" ID GREY
693671 VALVE TRANSITION CHECK 1/2" MPT X 5/8" OD

ITT DIRECT OVERBOARD HEAD (INT L)
806935 ADAPTER NYLON 3/4 MBARB X 3/4 MBARB
256677 CLAMP HOSE #12 1/2" 1 25 SS 505
256685 CLAMP HOSE #16 3/4 1 5 SS 505
123604 CLAMP LOOM VINYL DIP 2 5
723742 CLAMP PROTECTIVE RUBBER CAP 045 X 465-1/2"
169193 ELBOW BRZ 90DEG 3/4 MPT X 3/4 BARB
170381 ELBOW RED BRASS 90DEG 1 MPT X 1 BARB
762880 FILTER IN LINE WATER STRAINER 3/4"FPT RONVC
130765 HEAD ELECTRIC MARINE TOILET CERAMIC
466615 HOSE CUFF 1 1/8" R H WHITE
675132 HOSE CORR SAN/WATER FILL 1 1/8" RH
196667 HOSE GEN PURPOSE 1
123810 HOSE GEN PURPOSE 3/4
221762 LABEL NOTICE OVERBOARD DISCHARGE (LEXAN)
786707 PANEL MACERATOR OPT SPORT CRUISER 95
531368 SEACOCK BRZ 1 (CONBRACO)
518431 SEACOCK BRZ 3/4 W/O TAILPIECE (CONBRACO)
496141 SEALANT POLYURETHANE WHITE STAR BRITE
640318 THRU HULL BRZ 1 W/O NUT (CONBRACO)
640300 THRU HULL BRZ 3/4 W/O NUT (CONBRACO)

MACERATOR
533729 BRKR P/BTN MANUAL RESET 15A
256693 CLAMP HOSE #24 1 2" SS 505
531566 ELBOW BRZ 90DEG 1 5 MPT X 1 5 BARB
123844 HOSE SAN/SMOOTH WALL 1 5
221762 LABEL NOTICE OVERBOARD DISCHARGE (LEXAN)
786707 PANEL MACERATOR OPT SPORT CRUISER 95
134858 PUMP HEAD SYS MACERATOR
518456 SEACOCK BRZ 1 5 W/O TAILPIECE (CONBRACO)
496141 SEALANT POLYURETHANE WHITE STAR BRITE
141606 TEE PVC 1 5 MACHINED INSERT TEE
579870 THRU HULL BRZ 1 5 W/O NUT (CONBRACO)
135665 WIRE 10GA AWG BLACK
135673 WIRE 10GA AWG ORANGE
135541 WIRE 8GA AWG GREEN

MANUAL FLUSH HEAD W/HOLDING TANK
806935 ADAPTER NYLON 3/4 MBARB X 3/4 MBARB
129247 BAR ALUM FLAT 1/8"X 2"X 12
533729 BRKR P/BTN MANUAL RESET 15A
123398 CLAMP HOSE #06M 5/16 7/8" SS MINI
256677 CLAMP HOSE #12 1/2" 1 25 SS 505
256693 CLAMP HOSE #24 1 2" SS 505
123612 CLAMP LOOM VINYL DIP 11/16
723759 CLAMP PROTECTIVE RUBBER CAP 035 X 300-1/2"
723742 CLAMP PROTECTIVE RUBBER CAP 045 X 465 1/2"
609883 CLEAT PLAS 3/4"X 1"X 4 GREY
154997 CONN BUTT 16/14GA H/SHRINK
169193 ELBOW BRZ 90DEG 3/4 MPT X 3/4 BARB
134759 FILTER HEAD TREATMENT SYSTEM
762880 FILTER IN LINE WATER STRAINER 3/4 FPT RONVC
224895 HEAD MANUAL MARINE TOILET CERAMIC WHT (ITT)
123810 HOSE GEN PURPOSE 3/4
124719 HOSE SAN/CHEMICAL TDX 5/8"
123844 HOSE SAN/SMOOTH WALL 1 5
786699 PANEL 310SS/300DA WASTE SYSTEM CONTROL 95
151076 SCREW TAPPING #8A X 1 PPH SS
518431 SEACOCK BRZ 3/4 W/O TAILPIECE (CONBRACO)
496141 SEALANT POLYURETHANE WHITE STAR BRITE
185033 SENDING UNIT HOLD TANK CAP W/PROBE (2 POS)
582783 TANK HOLDING 28 GAL
130690 TAPE FOAM CLOSED-CELL NEOPRENE 1/4 X 2"
640300 THRU HULL BRZ 3/4 W/O NUT (CONBRACO)
135640 WIRE 10GA AWG RED
135327 WIRE 16GA AWG BLACK
135442 WIRE 16GA AWG GREEN
135400 WIRE 16GA AWG ORANGE
135525 WIRE 16GA AWG WHITE
135541 WIRE 8GA AWG GREEN

MANUAL FLUSH W/ HOLDING TANK W/ MACERATOR
221762 LABEL NOTICE OVERBOARD DISCHARGE (LEXAN)

MERCATHODE II
516021 ACC PART MERC BOOT BLACK (MERCATHODE)
587808 ACC PART MERCATHODE

MICROWAVE 120V/60
145128 BOX RECEPTACLE BOX ONLY
332031 BRKR/ROCK SGL POLE AC/DC HORZ 15A WHT
135228 CABLE MARINE STRANDED 14/3
258384 COVER PLATE SGL DUPLEX RECEPT WHT
845347 MICROWAVE ORIGO 0 6CF MA 693M
258376 RECEPTACLE DUPLEX RECEPT WHITE 15A
592527 VINYL SUEDE NATURAL 1/4 F/B (WASHABLE)

MICROWAVE 220V/50 INTL
145128 BOX RECEPTACLE BOX ONLY
332031 BRKR/ROCK SGL POLE AC/DC HORZ 15A WHT
135228 CABLE MARINE STRANDED 14/3
726885 MICROWAVE ELECTROLUX 0 6CF 220/50
256305 RECEPTACLE LEGRAND EXT W/COV 220/50 (GERMAN)
592527 VINYL SUEDE NATURAL 1/4 F/B (WASHABLE)

MID SHIP CLEATS (2) (IRELAND)
291658 CLEAT 8" 4 BOLT SS

REMOTE OIL FILTER 1 (V-8 W/ ALPHA)
142109 FILTER REMOTE OIL FILTER V8

ROD HOLDERS (PER PAIR)
130112 ADAPTER BRASS 1/4 MPT X 3/8"BARB
808089 ROD HOLDER FLUSH MNT CHR/BRS 30DEG CON TOURED
606087 TUBING GAUGE 0 148"ID #7 HEAVY WALL

SUNBRELLA CANVAS CARPET RUNNERS INTERIOR
837096 CANVAS 250DA CARPET RUNNER LINEN 96

TWO-TONE GELCOAT
715995 GEL COAT IRISH BLUE (ARMORCOTE)
830893 GEL COAT TEAL ESSENCE (ARMORCOTE)
716001 GEL COAT RUBY RED (ARMORCOTE)
157008 SEALANT SILICONE CLEAR RTV 10 3 OZ
616870 TAPE SOLID 1/4 FLINTSTONE CPM F/R

VHF RADIO STANDARD OMNI W/ANTENNA
819623 ANTENNA, 8 GLOMEX BG RA1206 W/O MT
122853 FITTING WATER TIGHT OUTLET FOR 5/16 CABLE
747550 FLUSH MOUNT KIT OMNI VHF WHITE
115311 MOUNT RATCHET 4 WAY W/1 14 MALE THREAD SS
747543 RADIO VHF OMNI WHITE
135327 WIRE 16GA AWG BLACK
135376 WIRE 16GA AWG RED

WINDLASS GOOD (ROPE)
653238 ACCESS PLATE PLASTIC 6 WHT T HANDLE
144972 ANCHOR SHACKLE W/SCREW PIN 3/8"
270637 ANCHOR 12LB W/960LB HOLD
140509 BOOT ENGINE STARTER RED
679191 BOX DC MAIN BKR PNL ASSY 270DA/WE/290DA 1993
213785 BRKR MANUAL RESET KLIXON 60A
642504 BUBBLE PACK ADHESIVE 6 X 300
154880 CONN RING 12/10GA X 10R W/INSUL
154849 CONN RING 8GA X 3/8R 583 W/INSUL
828491 DAVIT ANCHOR W/ROLLER SS 12# ANCHOR ONLY
697508 EYE BOW 3/8"X 2 75
126599 EYE STERN 1/2"X 3 7/16
819334 HOOK SNAP 5/16"X 3 1/8" SS (LYON)
534669 LABEL DANGER STAY CLEAR OF MOVING PARTS
464115 LANYARD 6 (AEROFAST)
805499 LANYARD CABLE ANCHOR LOCK SS W/O DK BOLT 16
433037 NUT BREAKER FACE RING ONLY ETA BLACK
152769 NUT HEX NYLON LOCK #1/4 20 SS
715185 PANEL 300DA 94 WINDLASS W/O SWITCH
793471 PLATE BACKING UNIVERSAL 3/16
491258 ROPE KIT GOOD 1/2"X 200 DEPTH COLORED
150961 SCREW TAPPING #10A X 3" POH SS
156984 SEALANT SILICONE WHITE RTV 10 3 OZ
757765 WINDLASS FOOTSWITCH HVY DUTY W/SAFTY CVR WHT
202234 WINDLASS 1/2" 600LB CAP FR/DROP
135665 WIRE 10GA AWG BLACK
135335 WIRE 16GA AWG BROWN
135442 WIRE 16GA AWG GREEN
135590 WIRE 6GA AWG BLACK
135608 WIRE 6GA AWG RED
135566 WIRE 8GA AWG RED

WINDLASS LOFRANS AIRON (CHAIN)
653238 ACCESS PLATE PLASTIC 6 WHT T HANDLE
716902 ANCHOR SHACKLE W/SCREW PIN 1/4
270637 ANCHOR 12LB W/960LB HOLD
140509 BOOT ENGINE STARTER RED
679191 BOX DC MAIN BKR PNL ASSY 270DA/WE/290DA 1993
228064 BRKR MANUAL RESET KLIXON 105A
642504 BUBBLE PACK ADHESIVE 6 X 300
130799 CABLE BATT BLK #2AWG
130781 CABLE BATT RED #2AWG
695650 CHAIN HIGH TEST 1/4"X 100
154955 CONN FLANGED SPADE 16/14GA X 10R W/INSUL
154831 CONN RING 16/14GA X 3/8R W/INSUL
192278 CONN RING 2GA X 1/4R 630 BARE ELONG
130831 CONN RING 2GA X 3/8R BATT/CABLE COP
192260 CONN RING 6GA X 1/4R X 480 BARE ELONG
828491 DAVIT ANCHOR W/ROLLER SS 12# ANCHOR ONLY
697508 EYE BOW 3/8"X 2 75
126599 EYE STERN 1/2"X 3 7/16
777912 GUARD HDPE 1/4"X 4"X 16 CHAIN (LOFRANS)
722553 HARNESS LOFRANS WINDLASS REMOTE/MAIN SWITCH
819334 HOOK SNAP 5/16 X 3 1/8" SS (LYON)
534669 LABEL DANGER STAY CLEAR OF MOVING PARTS
464115 LANYARD 6 (AEROFAST)
805499 LANYARD CABLE ANCHOR LOCK SS W/O DK BOLT 16
433037 NUT BREAKER FACE RING ONLY ETA BLACK
152769 NUT HEX NYLON LOCK #1/4 20 SS
715185 PANEL 300DA 94 WINDLASS W/O SWITCH
722546 PANEL WINDLASS REMOTE/MAIN SWITCH LOFRANS
793471 PLATE BACKING UNIVERSAL 3/16
151662 SCREW MACHINE #1/4-20 X 2 5 POH SS
156984 SEALANT SILICONE WHITE RTV 10 3 OZ
644609 SOLENOID MAGNETIC LATCHING 12V 100AMP
651869 SOLENOID MAGNETIC LATCHING LEAD ONLY
189365 WASHER FENDER 1/4"X 1 25 SS
757765 WINDLASS FOOTSWITCH HVY DUTY W/SAFTY CVR WHT
621250 WINDLASS SOLENOID 12V
695106 WINDLASS 1/4 W/CHAINWHEEL

WINDSHIELD DEFOGGER W/ HOT WATER 220V
141713 ADAPTER BRASS 3/8" MPT X 5/8" BARB
168856 NIPPLE BRASS 3/8" MPT X 1 5
171439 TEE BRASS 3/8"FPT

WINDSHIELD DEFOGGER W/ HOT WATER 220V
141713 ADAPTER BRASS 3/8" MPT X 5/8"BARB
168856 NIPPLE BRASS 3/8" MPT X 1 5
171439 TEE BRASS 3/8"FPT

WINDSHIELD DEFOGGER/COCKPIT HEATER
141713 ADAPTER BRASS 3/8" MPT X 5/8"BARB
256677 CLAMP HOSE #12 1/2" 1 25 SS 505
123612 CLAMP LOOM VINYL DIP 11/16
123604 CLAMP LOOM VINYL DIP 2 5
800706 HEATER BLOWER KIT W/3-SPD MOTOR WHT
124024 HOSE VENT/BLOWER 3" EX HVY DTY
124594 HOSE WATER 5/8" HVY DTY (HEATER)
774224 PANEL HEATER SWITCH (HEATER CRAFT)
749549 VALVE BRZ 2 WAY FUEL 3/8"FPT SURFACE MNT

WOOD ACCENT STEERING WHEEL
837211 STEERING WHEEL 3-SPOKE WOOD W/URETHANE PAD