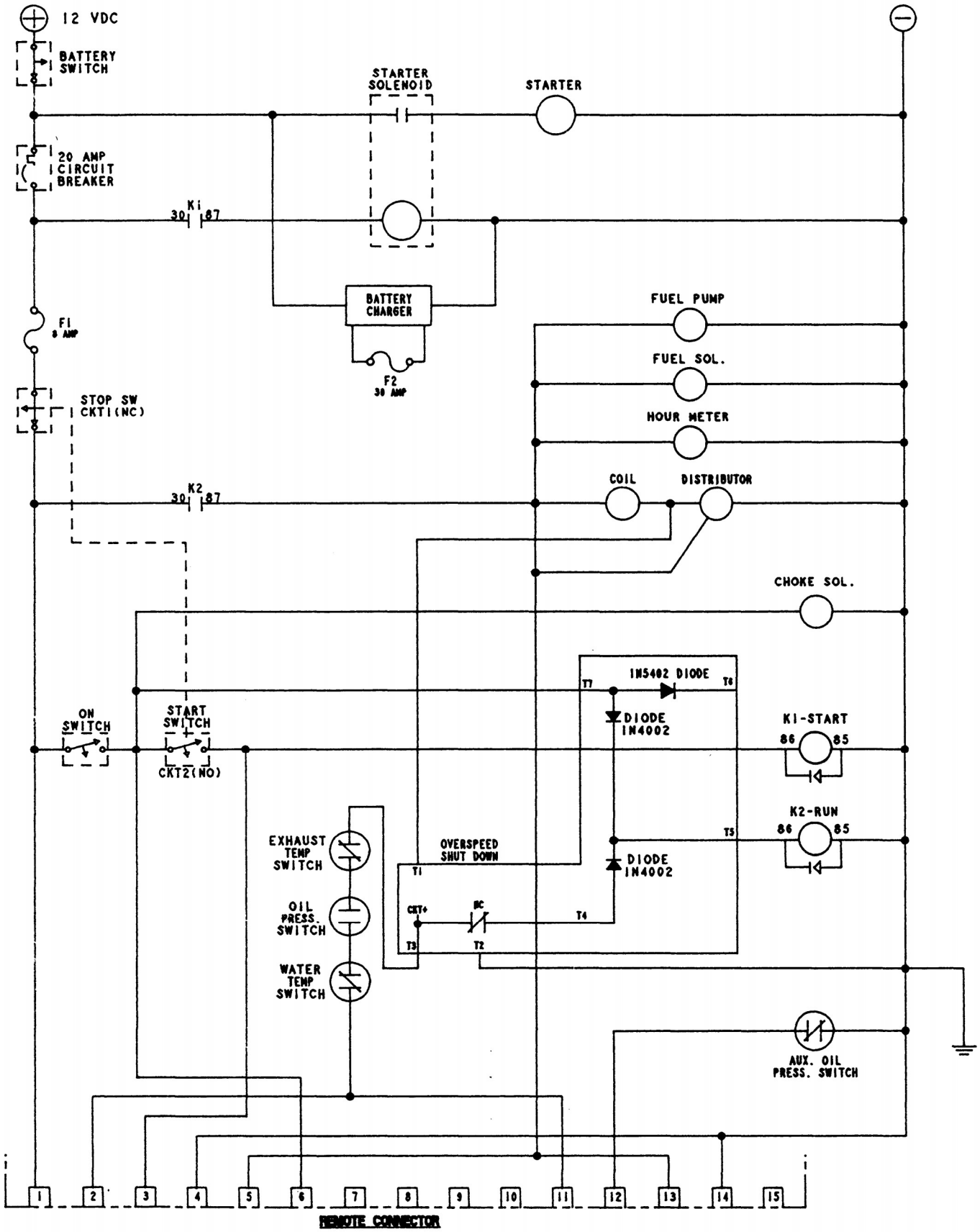

NOTE: *To by-pass the Overspeed Shutdown for test purposes when troubleshooting, move the connection T3 over to and connect with T5.*

Do not operate the generator with the Overspeed Shutdown by-passed. This is for troubleshooting only.